Crestline® Dampening System

Installation Instructions

Hamada 662, 662E (Molleton) Satellite Head

ACCEL®
Graphic Systems

X88-29
12/97

GENERAL INFORMATION

ATTENTION CRESTLINE® DAMPENER OWNER!

Accel Graphic Systems provides parts and service through its authorized distributors and dealers. Therefore, all requests for parts and service should be directed to your local dealer.

The philosophy of Accel Graphic Systems is to continually improve all of its products. Written notices of changes and improvements are sent to Accel Graphic System's Dealers.

If the operating characteristics or the appearance of your product differs from those described in this manual, please contact your local Accel Graphic System's Dealer for updated information and assistance.

Always update your dampener when improvements are made available, especially those related to safety.

YOUR AUTHORIZED CRESTLINE® DEALER IS:

_____

_____

_____

_____

THE SERIAL NUMBER OF YOUR CRESTLINE® DAMPENER(S) IS:

_____

_____

SAFETY INFORMATION

FOR YOUR SAFETY, DO NOT DISENGAGE OR REMOVE ANY GUARDS FROM THE CRESTLINE® DAMPENER. THE DAMPENER CONTAINS SOME INWARD ROTATING ROLLER NIPS THAT CAN CAUSE INJURY IF LEFT UNGUARDED.

BASIC CONFIGURATION OF CRESTLINE®

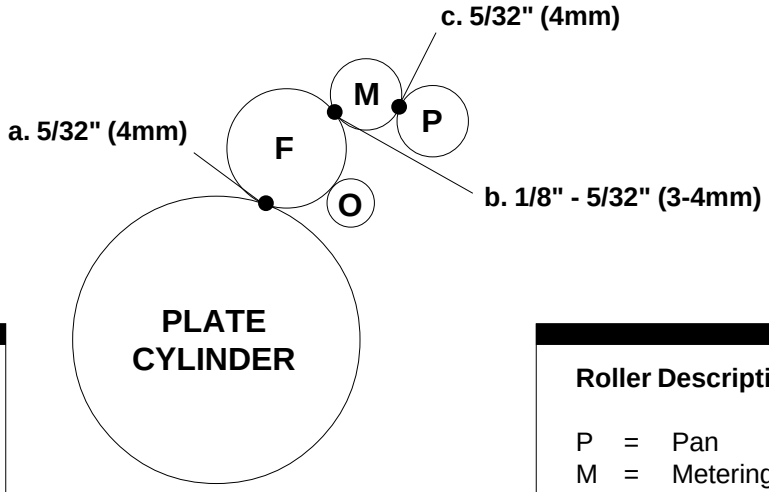

Adjustments

a. Form to Plate
b. Form to Metering
c. Metering to Pan

Roller Description

P = Pan
M = Metering
O = Oscillator
F = Form

TERMINOLOGY

OPS = Operator's Side

NOPS = Non Operator's Side

TECHNICAL ASSISTANCE

For technical assistance during the installation, please contact:

ACCEL GRAPHIC SYSTEMS
11103 Indian Trail
Dallas, TX 75229
(972) 484-6808
FAX (800) 365-6510
E-MAIL accel@dallas.net
WEB SITE www.accelgraphicsystems.com

Crestline® is covered by U.S. Patents and Patents Pending

REQUIRED TOOLS

1. 10 mm Open End Wrench
2. 3/8" Open End Wrench
3. 1/2" Open End Wrench
4. 7/16" Open End Wrench
5. 3/32" Allen Wrench
6. 1/8" Allen Wrench
7. 3/16" Allen Wrench
8. 2.5 mm Allen Wrench
9. 3 mm Allen Wrench
10. 4 mm Allen Wrench
11. 5 mm Allen Wrench
12. 5 mm Allen (Stud End, provided)
13. 1/8" Punch
14. Hammer
15. Spring Hook Tool
16. Standard Screwdriver

PRE-INSTALLATION INFORMATION

1. Cut the ties holding the rollers and examine rollers for gouges, scratches, or nicks.

2. Check box and parts board to make sure all pieces are present and nothing has broken in shipping.

3. Check the dampener for parallel. (Cutter bed works best.) If dampener rocks, it needs to be realigned. Loosen tie bar bolts at OPS and align the frames on the flat surface. Re-tighten bolts.


SUBJECT
SUBJECT

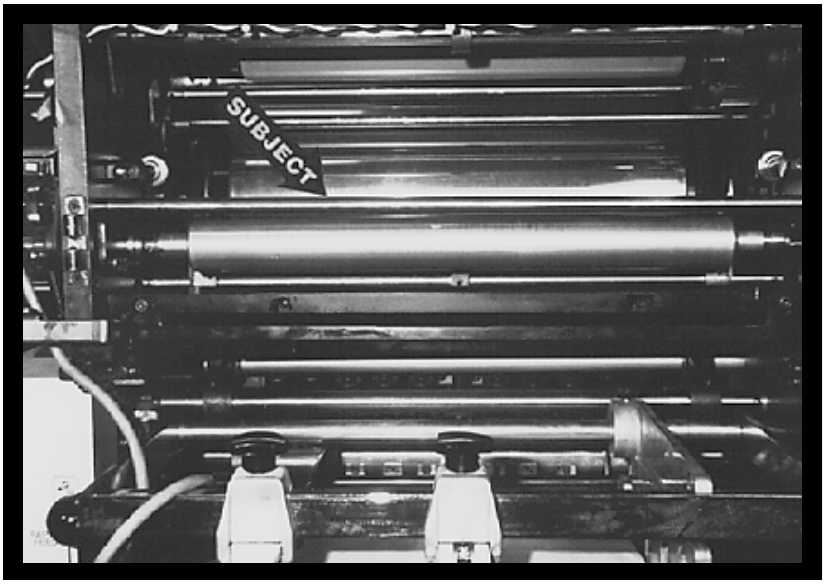
SUBJECT

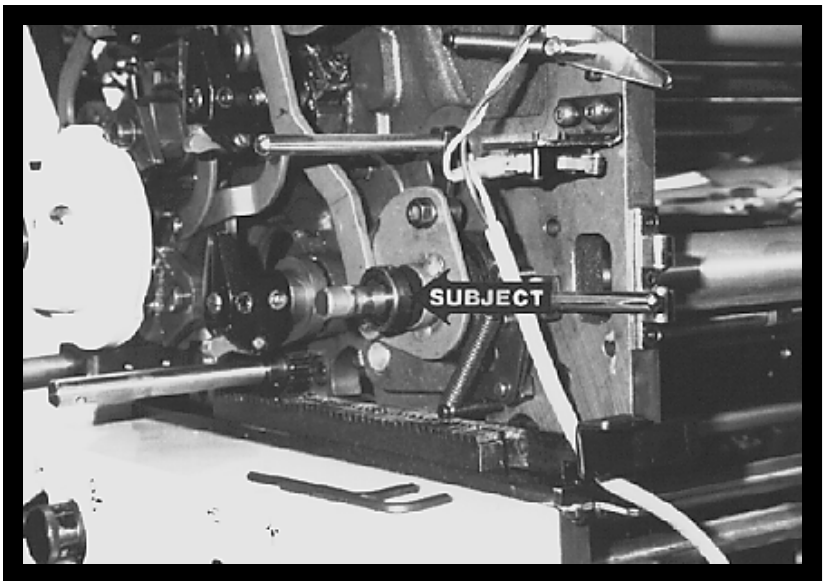
SUBJECT

1 Remove water pan and drip pan by undoing bolts on tie bar (subject arrows).

2 Remove small tie bar above pan roller (subject arrow). Bar is held in place by bolts in OPS & NOPS frames.

3 Remove set collar (subject arrow) on shaft at OPS.

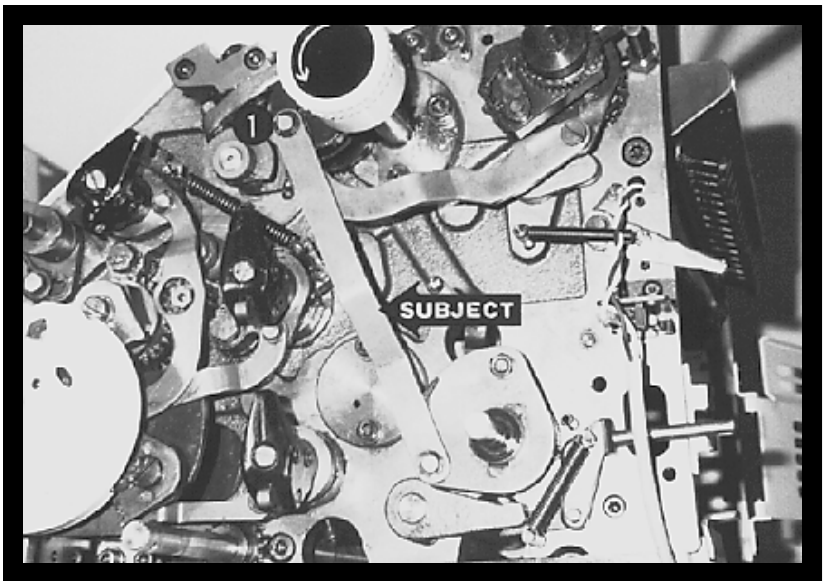
1
SUBJECT

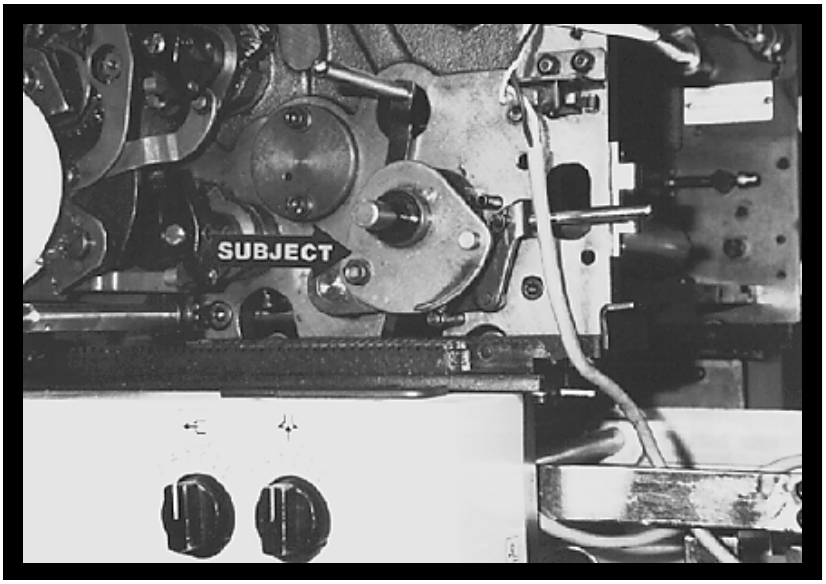
SUBJECT

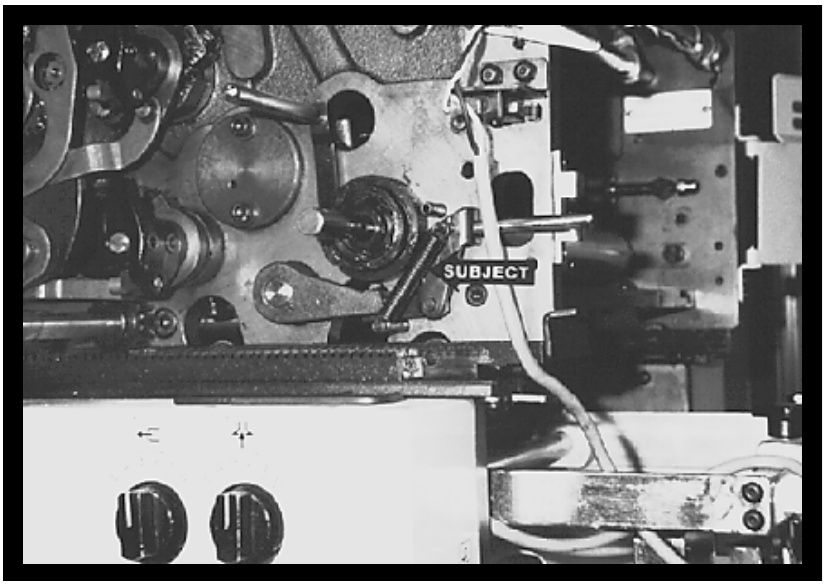
SUBJECT

4 Remove arm linking water and ink trains (subject arrow). Place spacer (provided) over stud (#1) and reinstall "E" clip.

---

5 Pull off eccentric cam (subject arrow).

---

6 Remove spring (subject arrow).

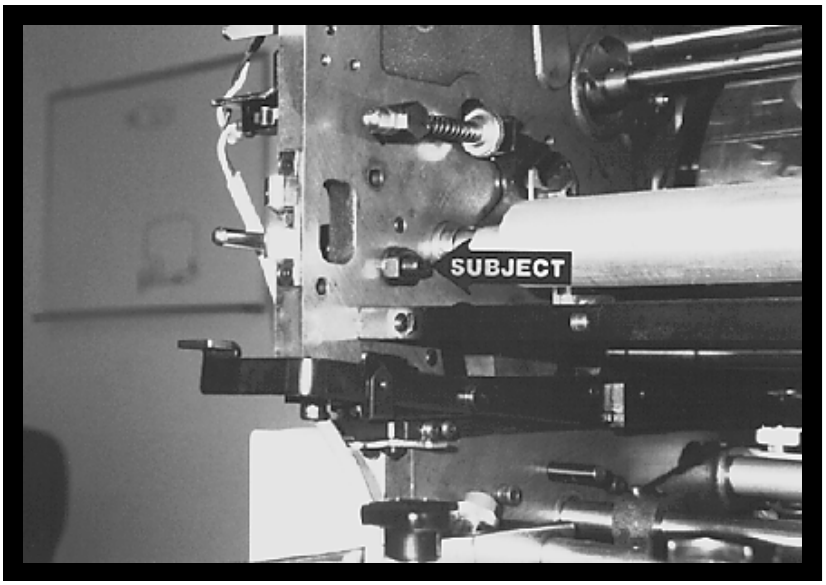
SUBJECT

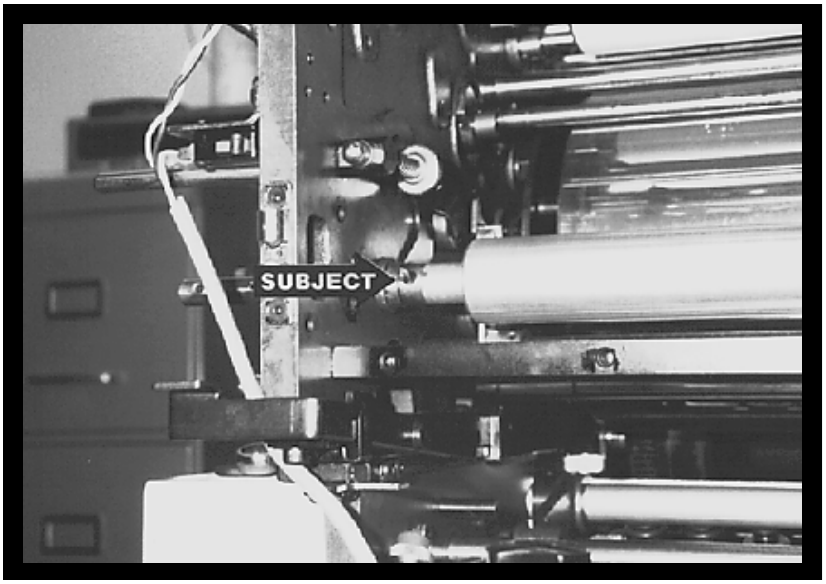
SUBJECT

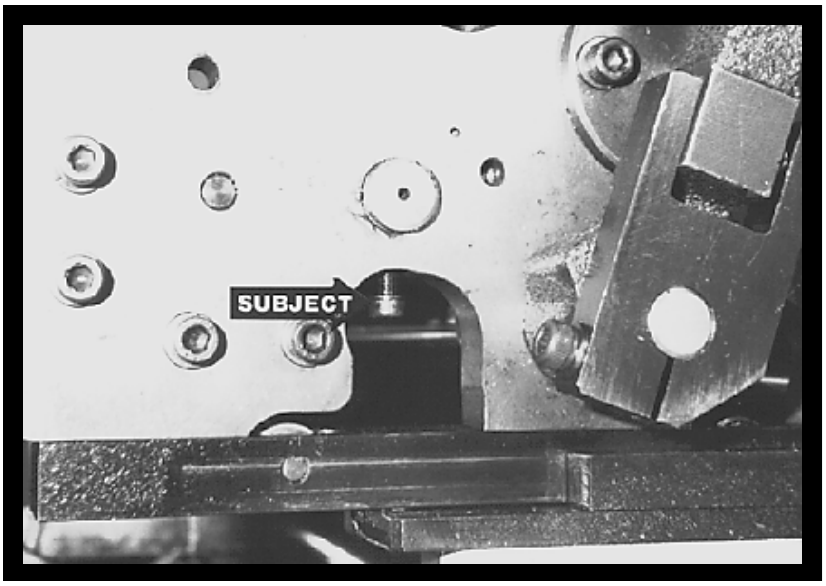
SUBJECT

7 Remove nut on inside of press frame (subject arrow) and remove arm assembly that held nut in place.

8 Loosen and remove set screw in drive collar (subject arrow) at OPS of water pan roller. Pull out shaft (to left of subject arrow).

9 Remove bolt below pan roller shaft at NOPS (subject arrow) and pull pan roller out of the press. A similar bolt exists below the pan roller bearing at OPS. Remove both the bolt and the bearing.

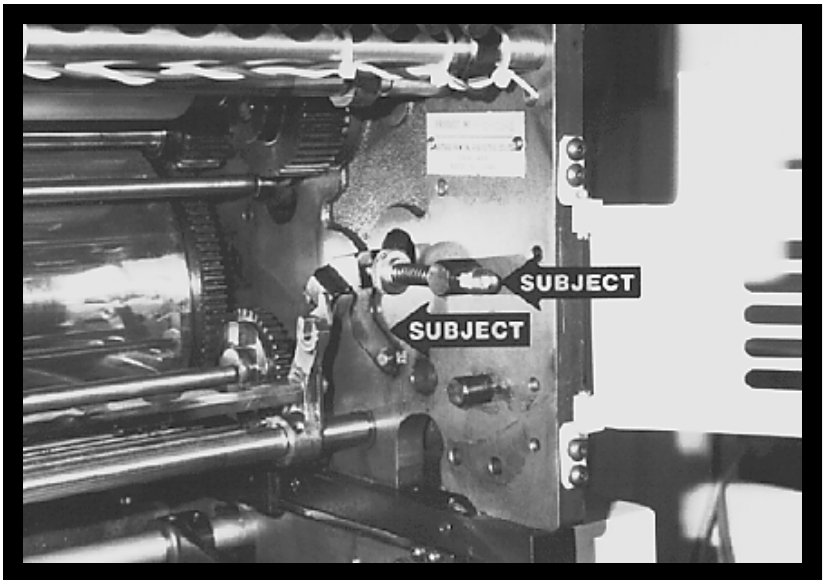
SUBJECT
SUBJECT

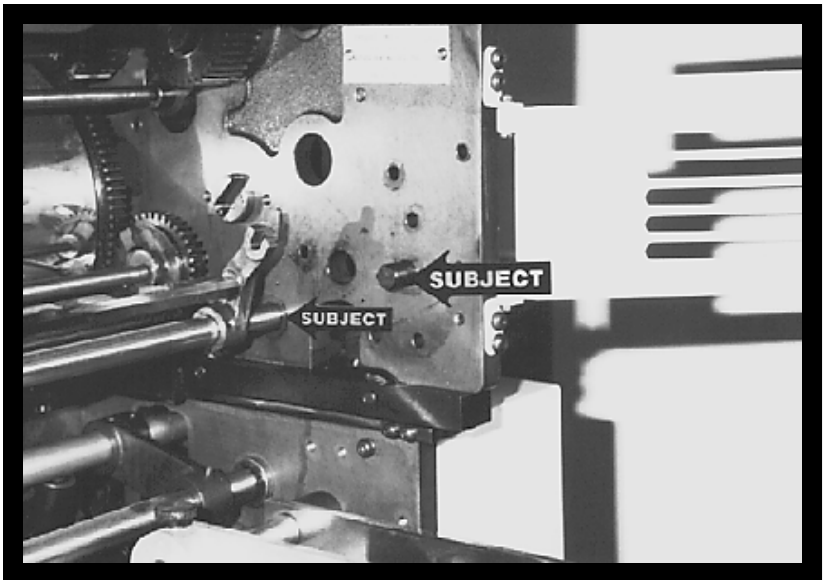
SUBJECT
SUBJECT

10 Remove the four bolts holding the rectangular tie bar that was beneath the water pan roller. Remove the tie bar.

---

11 Remove spring loaded mechanisms and arms from inside the press frames at OPS and NOPS (subject arrows).

---

12 Remove stud at NOPS (large subject arrow). Also remove snap rings on the interior of the frame that hold the ductor shaft at OPS and NOPS (small subject arrow).

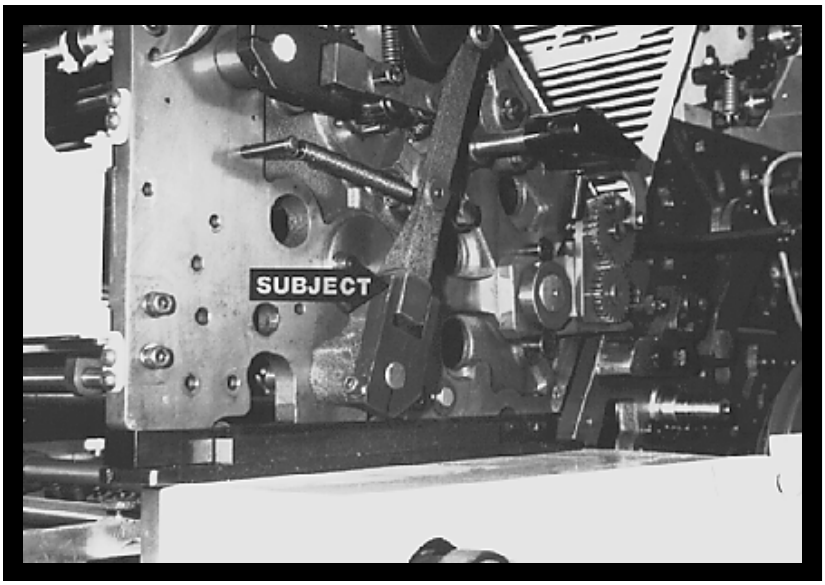
SUBJECT

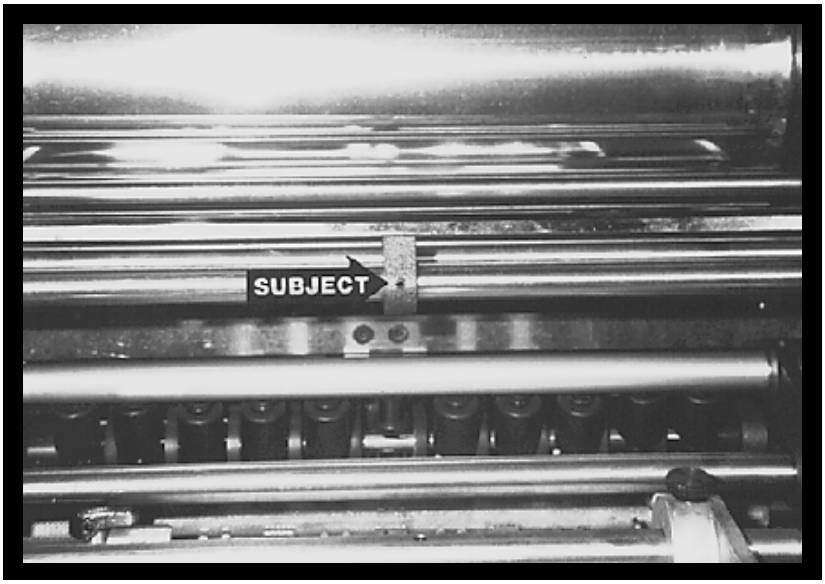
SUBJECT

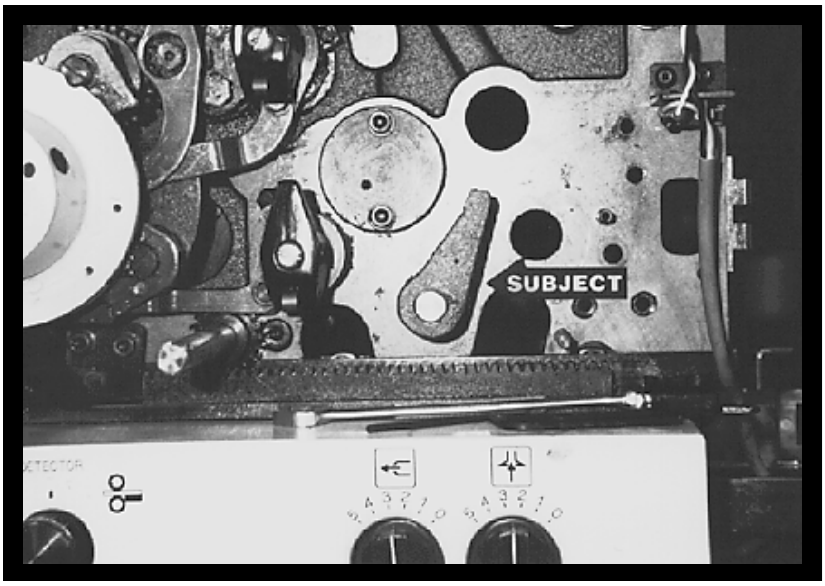
SUBJECT

13 Remove large ductor arm (subject arrow) at NOPS.

---

14 Knock out pin in the middle of ductor mechanism (subject arrow).

---

15 Grasp arm at OPS (subject arrow) and pull out ductor shaft through side frame. This will also remove assembly.

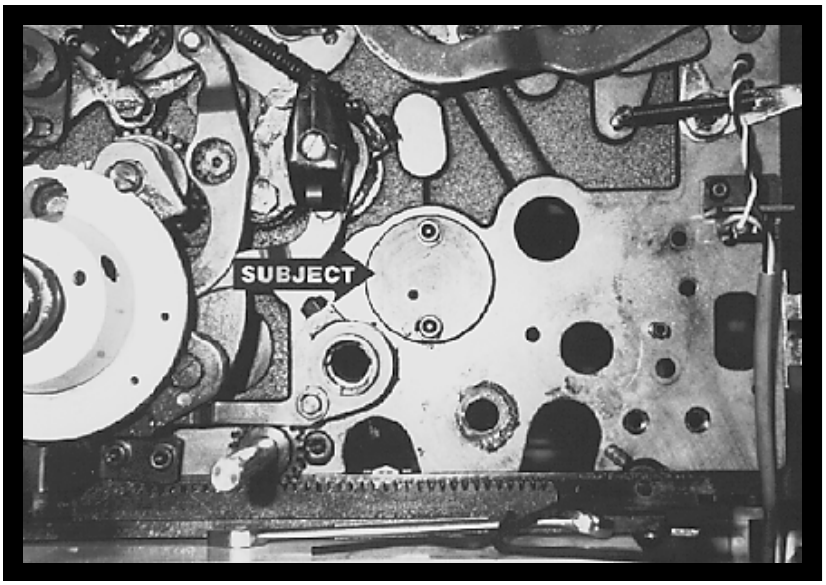
SUBJECT

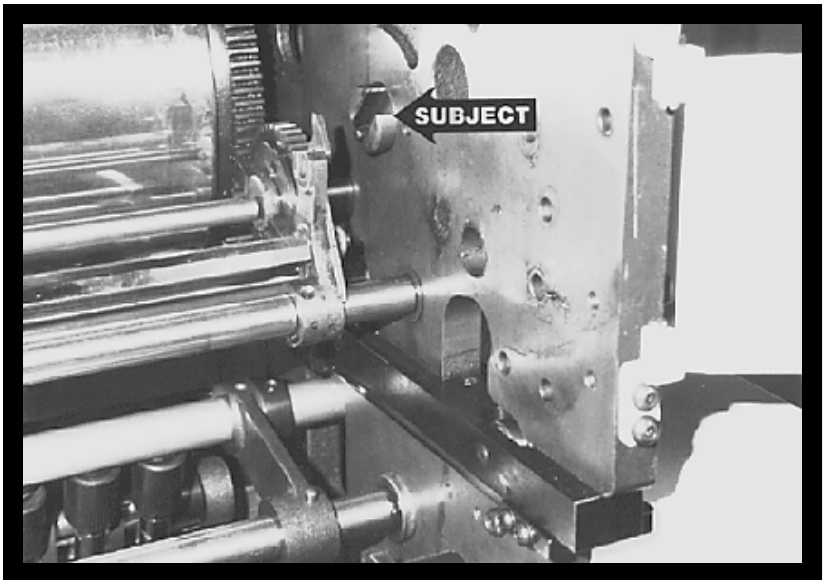
SUBJECT

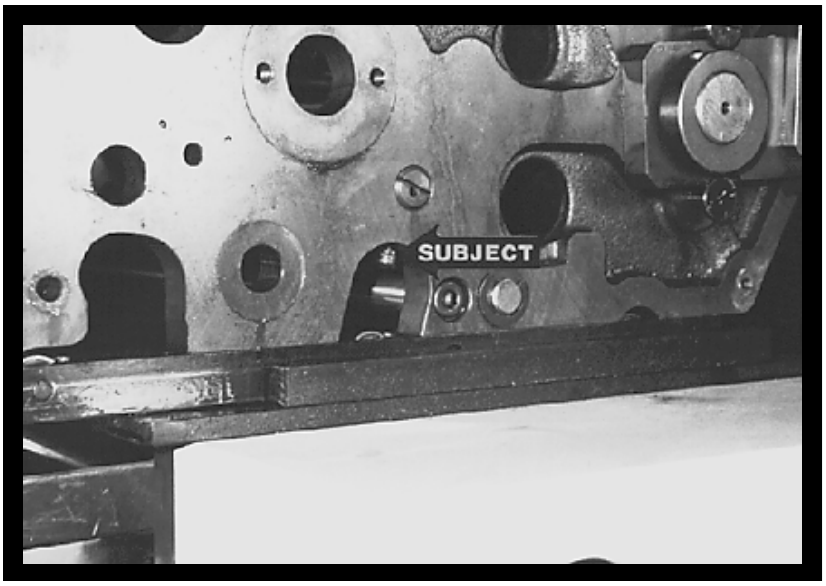
SUBJECT

16 Remove cap head bolts and plate at OPS and NOPS (subject arrow).

17 Tap out slotted casting at OPS and NOPS (subject arrow).

18 Remove cap head screw at NOPS (subject arrow).

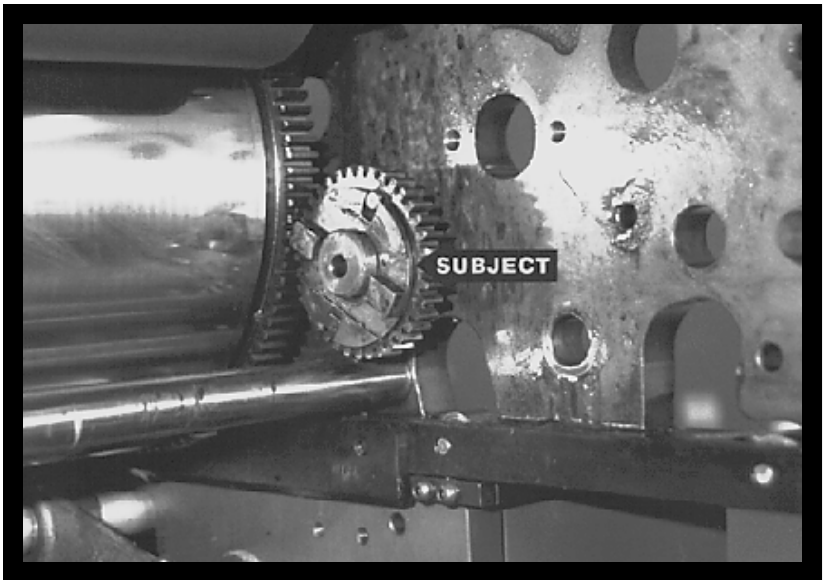
SUBJECT

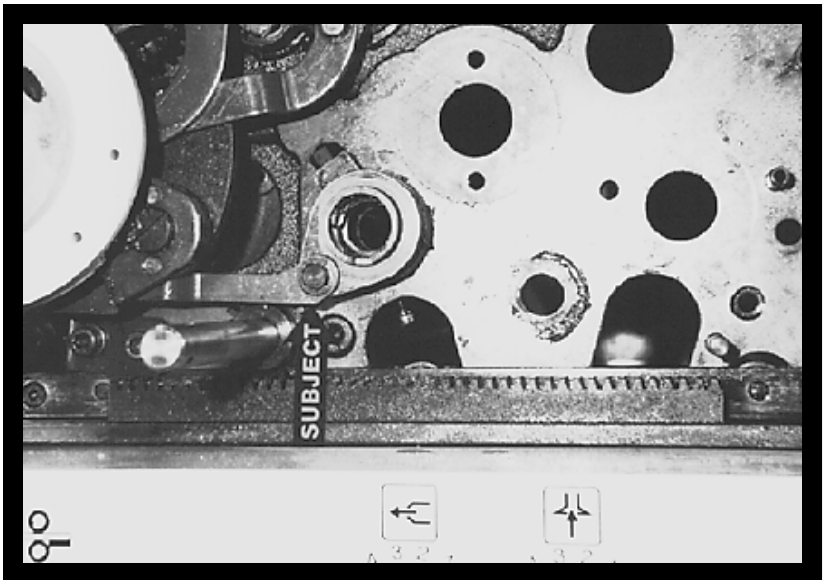
SUBJECT

19 Tap out water form drive gear (subject arrow).

20 Unhook and remove single lever link (subject arrow). Undo cap head bolt (right of subject arrow) and tap out water form housing from side frame.

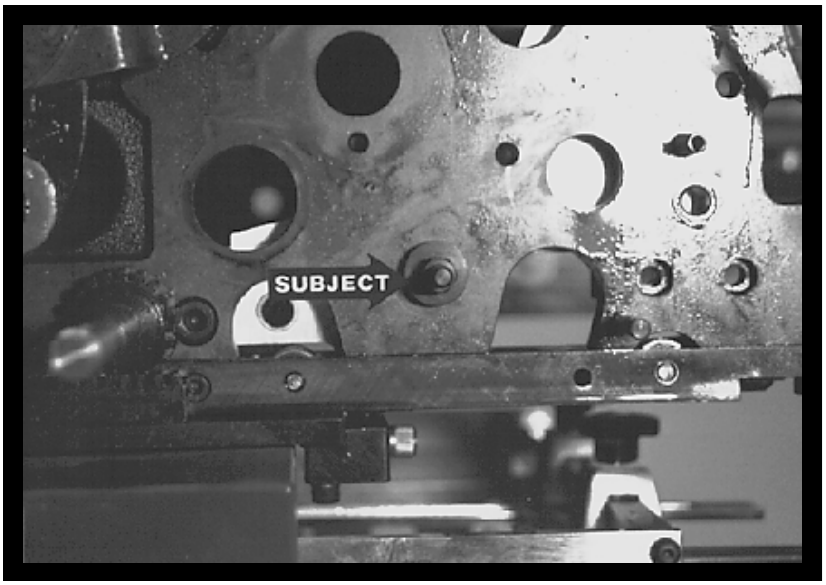
SUBJECT

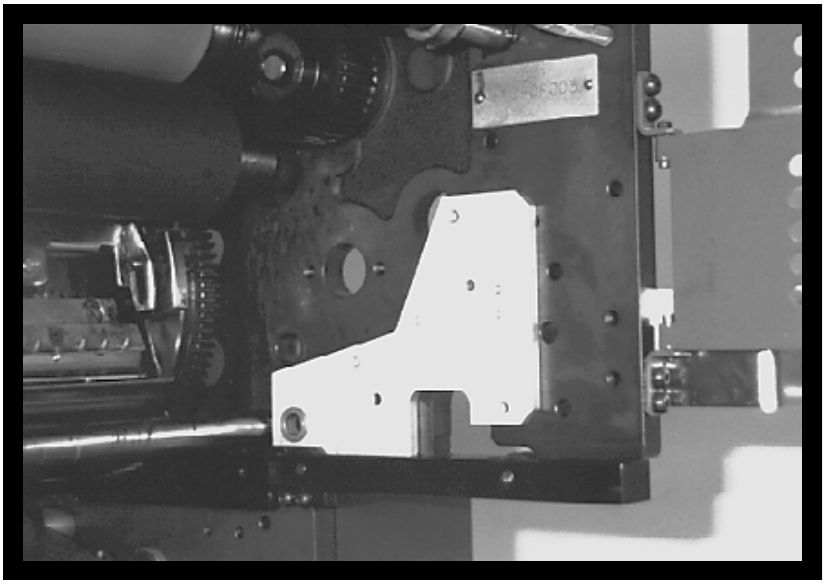

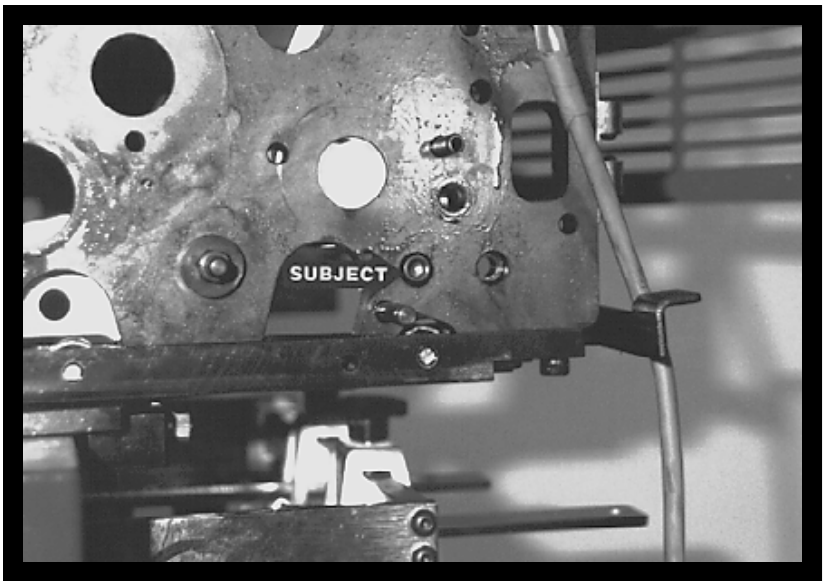
SUBJECT

1 Install plate at OPS and NOPS and secure with spool and stud (subject arrow).

2 Note how the bushing is positioned in the lower left corner of the frame.

3 Install the bolt in the tie bar hole and thread into the plate installed in step 1 (subject arrow).

Push down on the front portion of the plate and tighten the bolts from steps 1 and 3 to secure the plate.

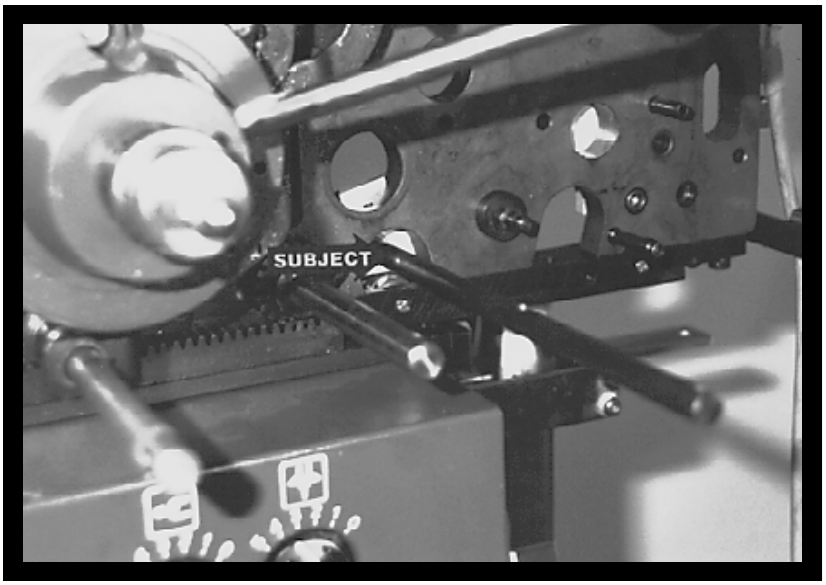
SUBJECT

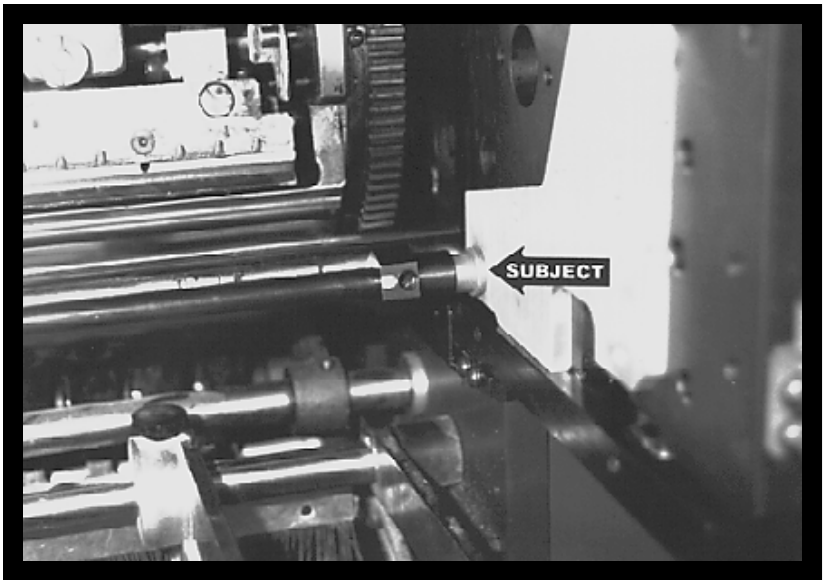
SUBJECT

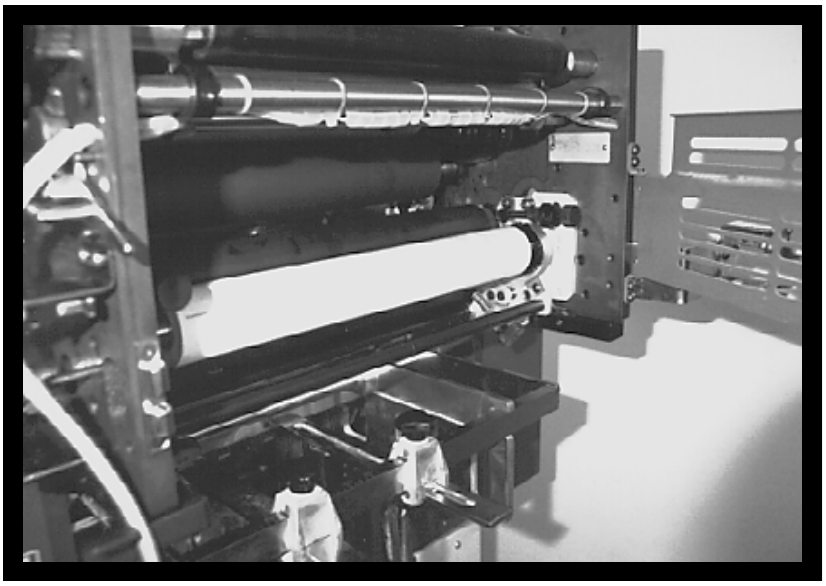

4 Install shaft through the bushings in the plate. Do not push the shaft all the way through the press at this time.

---

5 Slide a spacer and eccentric on to the shaft so the spacer hits the bushing in the mounting plate (subject arrow).

Slide on the OPS side first, then the NOPS. Rotate the eccentric until the paint mark (high side) is facing the feed end of the press and secure the eccentric to the shaft with the threaded pins provided. The holes in the eccentric line up with holes in the shaft.

---

6 Slide the dampener between the mounting plates.

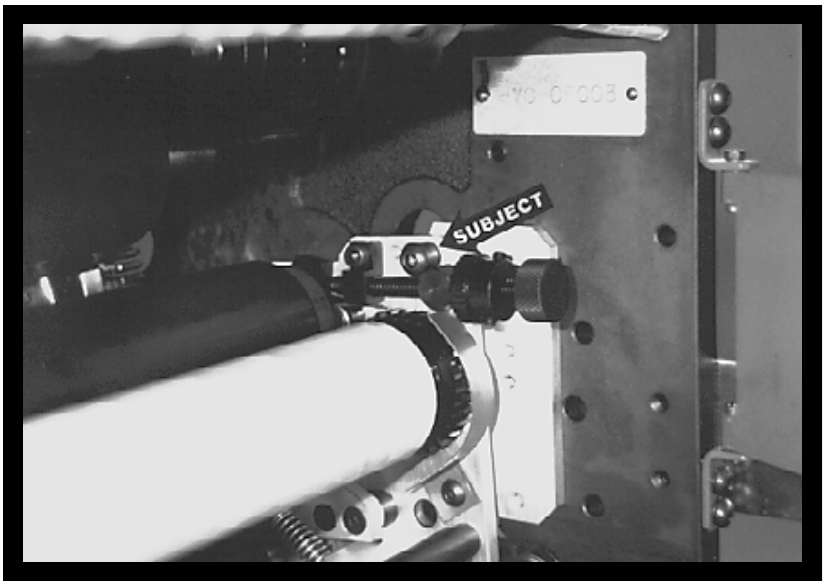
SUBJECT

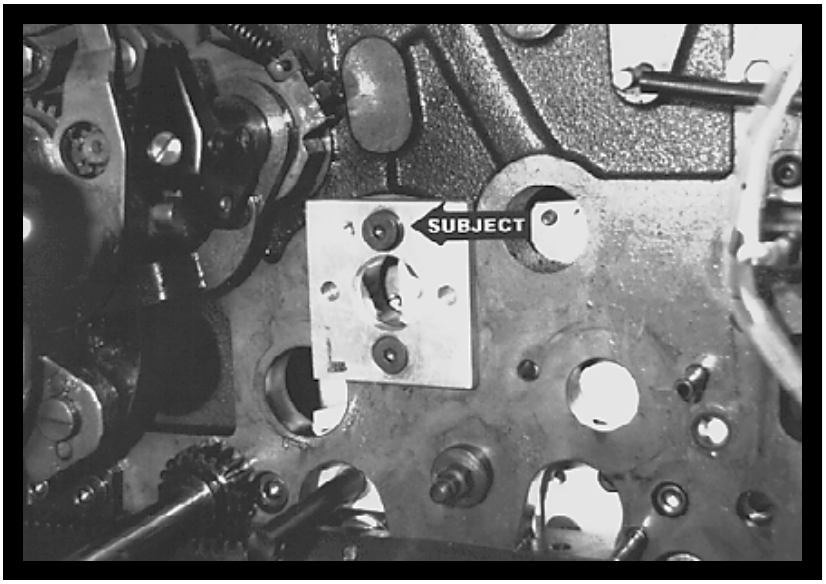
SUBJECT

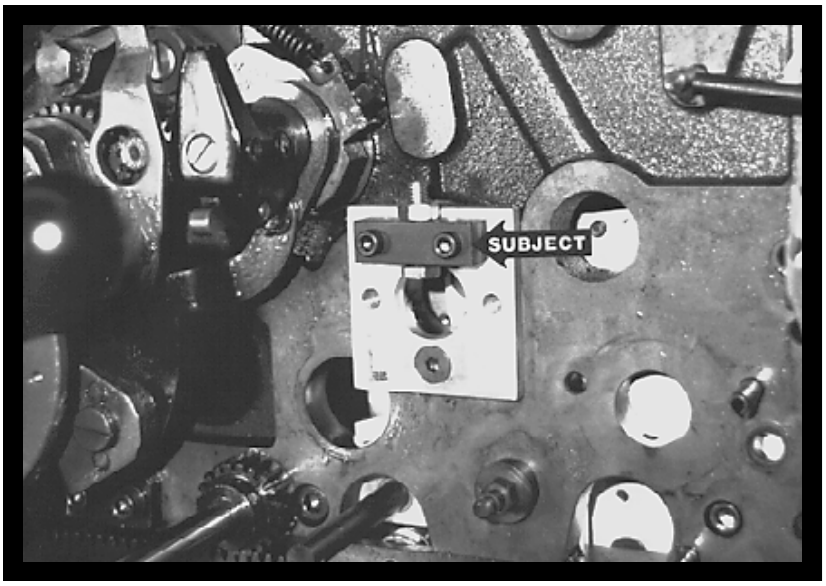
SUBJECT

7

Secure the dampener to the mounting plate with the button head bolt and spools (subject arrow). Make sure the dampener gear meshes with the plate cylinder gear.

8

Install square plates (subject arrow) at OPS and NOPS.

The OPS plate uses counter sunk screws placed in a vertical format as shown in the picture.

The NOPS plate uses cap head screws placed in a horizontal format. The NOPS plate has a block already mounted on it.

9

Install water form adjustment block to OPS plate from step 8 (subject arrow).

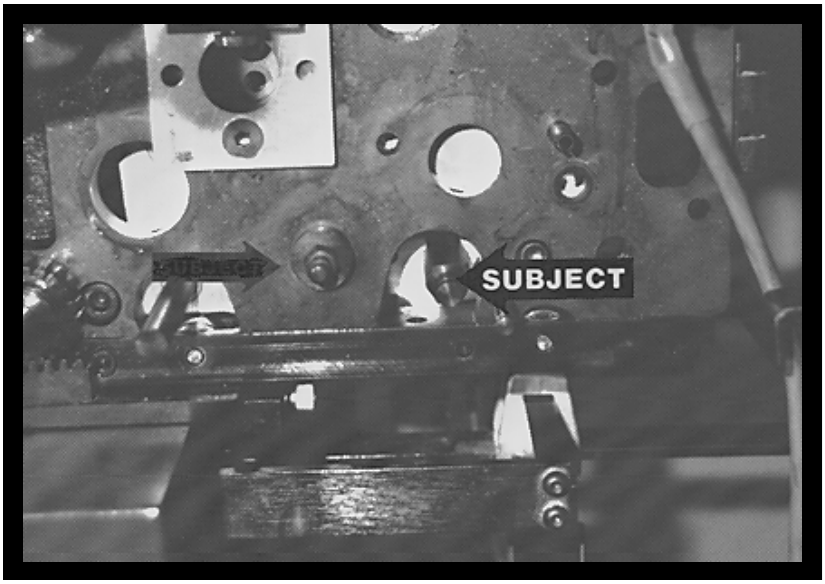
SUBJECT

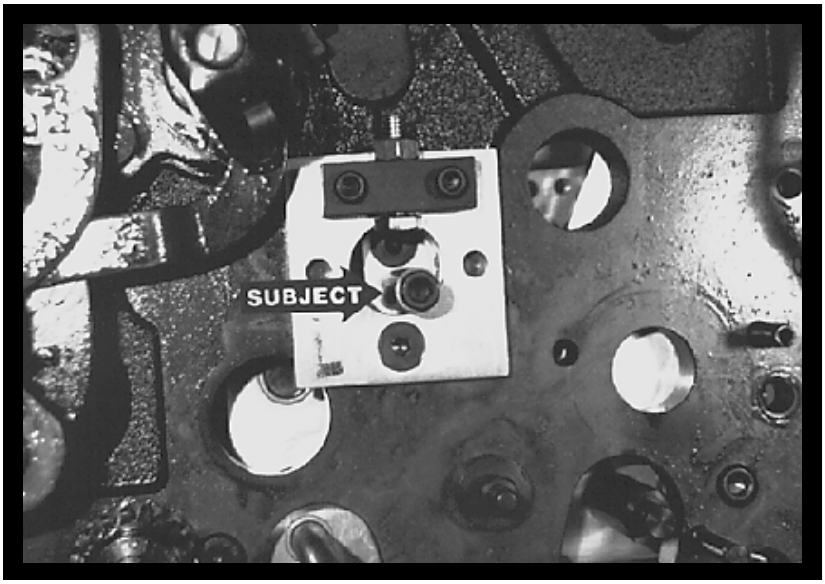
SUBJECT

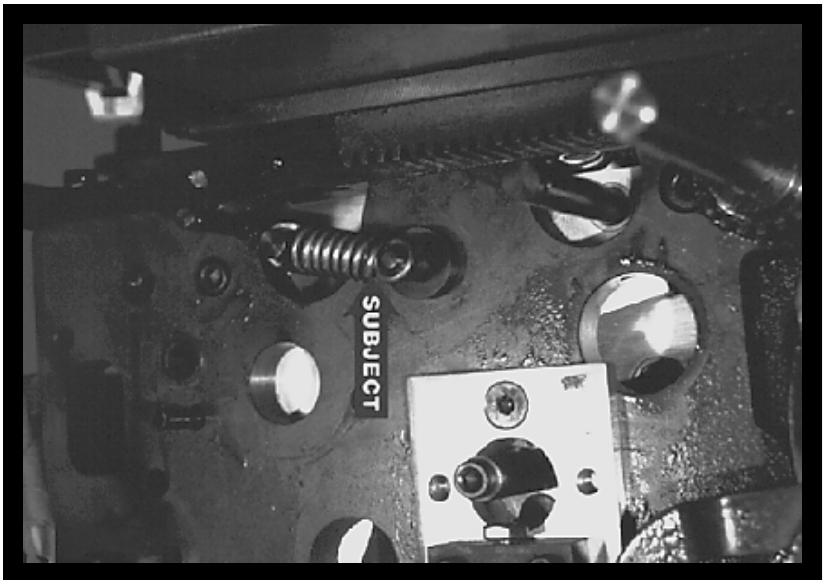
SUBJECT

10 Install stud at OPS and NOPS (subject arrow).

11 Install long spool and bolt at OPS and NOPS (subject arrow).

12 Install spring (subject arrow) between two studs at OPS and NOPS.

Make sure the dampener gear still meshes with the plate cylinder gear.

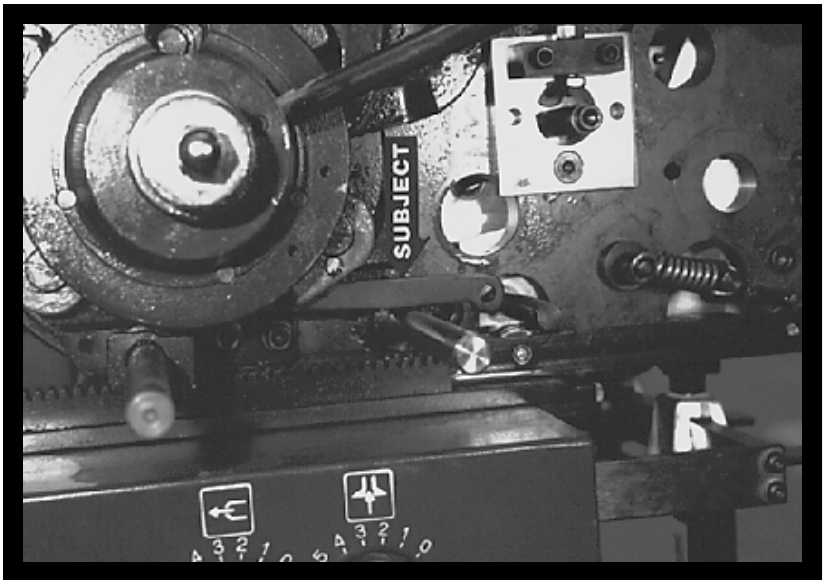
SUBJECT

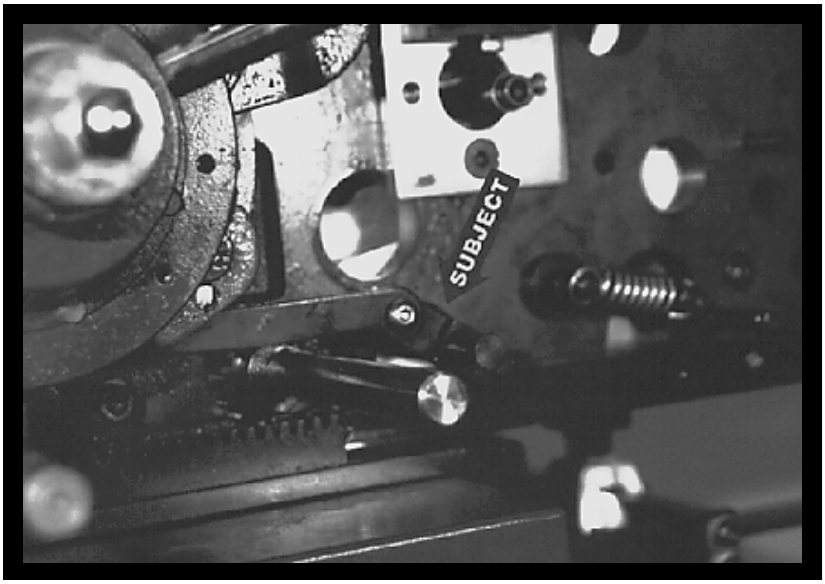
SUBJECT

13 Install new single lever link (subject arrow).

14 Attach single lever link block (subject arrow) to link and shaft.

YOU ARE NOW READY FOR FINAL ADJUSTMENTS.

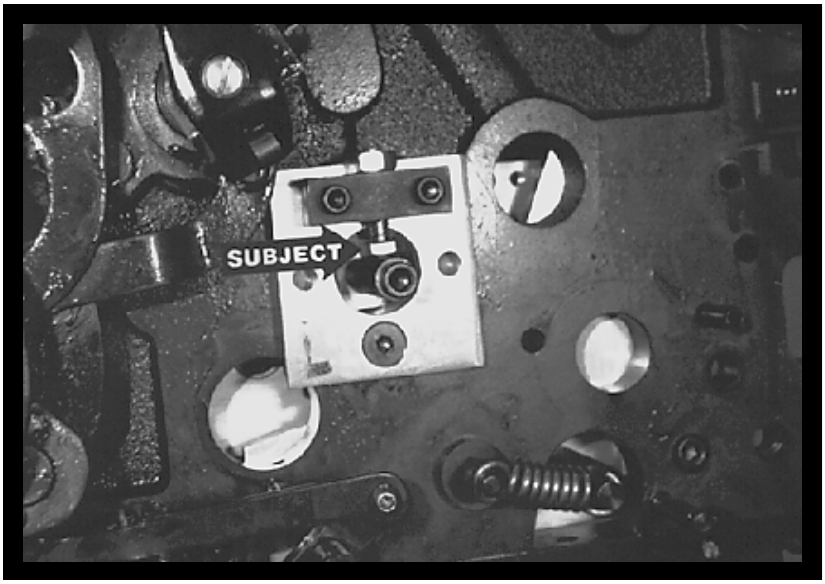
SUBJECT

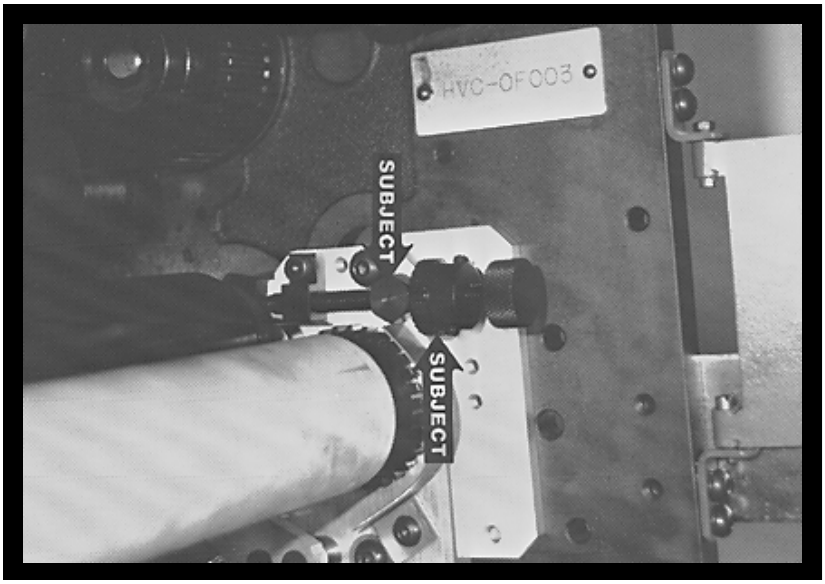
SUBJECT
SUBJECT
HVC-0F003

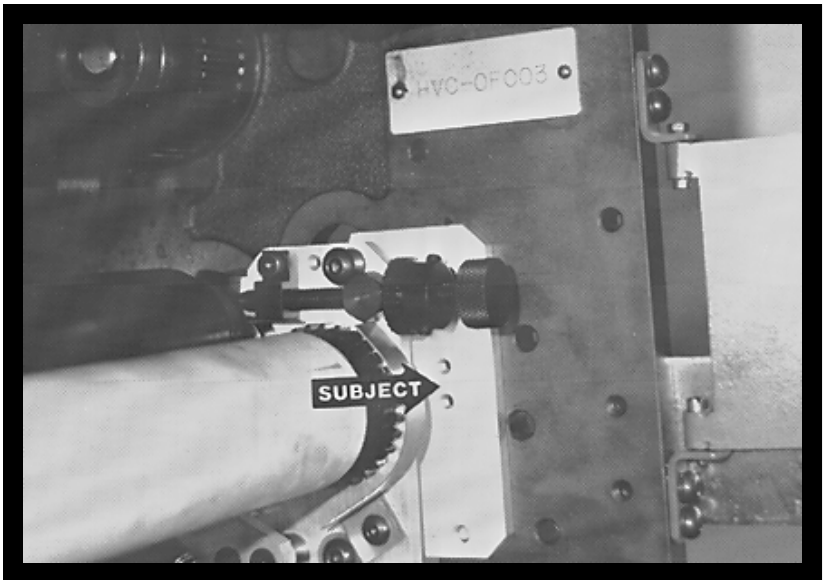
SUBJECT
HVC-0F003

1

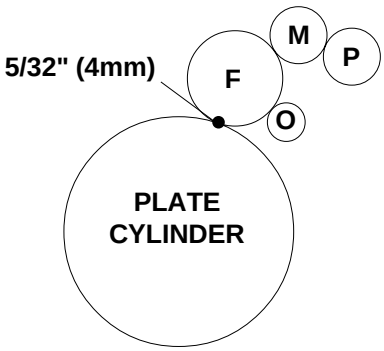

Mount a plate to the second color head. Dab some ink on the oscillator roller and run the press at a relatively slow speed to distribute the ink on the dampener. Move the single lever to the "WATER ON" position and check the stripe to the plate. Crestline® requires a 5/32" (4mm) stripe.

Adjust the stripe by changing the bolt (subject arrow) on the block. The further down the bolt sits, the lighter the form stripe.

Note the position of the single lever link and block at the bottom of the picture (left of the spring).

2

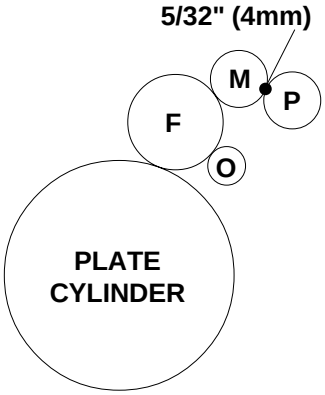

Spin the ratchet gear in (right hand subject arrow) until it stops against the stud (left hand subject arrow).

Turn the thumb screw in to apply pressure between the metering and pan rollers.

Allow the press to idle for a few seconds and then turn it off. Check the stripe between the metering and pan rollers. It should be 5/32" (4mm).

Adjust the stripe by turning the thumb screw. Once the correct pressure has been set, lock the ratchet gear to the thumb screw by use of the small, nylon-tipped set screws in the ratchet gear.

3

Locate the two holes in the mounting plate (subject arrow) and thread the small cap head bolts partially into them.

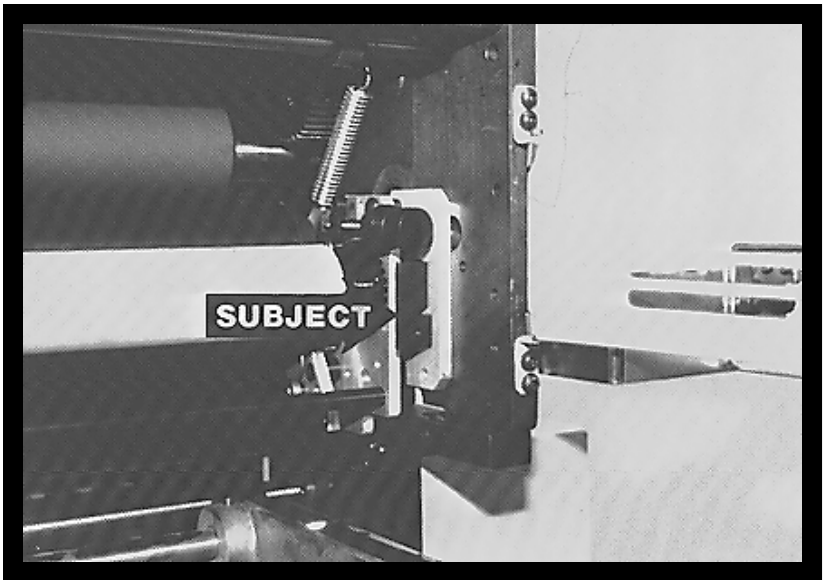
SUBJECT

4 Slide the water pan mounting plates between the plate and bolt heads and tighten the bolts.

5 The water pan mounts to the plates installed in step 8 (in the Installation section).

6 Crestline® uses the existing water bottle and height adjustment.

START OF DAY

A. Make sure the oscillator and metering rollers are in place.

B. Spin knurled knobs down until the shoulder on the ratchet gear stops against the post.

C. Place water bottle in cup.

NOTE: Accel recommends using the proper fountain solution for the plate material being run on the press. A good acid/gum etch should be used with metal plates, an electrostatic etch with electrostatic plates, and Silvermaster type solution with Silvermaster type plates (black plates).

D. Mount plate to cylinder. Wipe down all plates before running. **Pre-ink the Crestline® dampener before running the plates with an extremely light coverage of ink. Dab the ink on the oscillator only.**

RUNNING DURING THE DAY

A. In general, the Crestline® Dampener should not have to be adjusted from job to job. The form roller setting should never be changed unless it has deviated from the factory specification of 5/32" (4mm) to the plate.

B. Adjustments to the amount of water fed to the plate are made by the knurled knobs that apply pressure to the metering roller. The dampener has been set up for minimum water. To *increase* the water to the plate, turn the *knurled knobs counter clockwise* 1 or 2 clicks at a time. This opens the gap between the metering and pan rollers and allows more water to the plate.

C. In general, more water will only be required when going from a metal plate to an electrostatic or Silvermaster type plate.

WASH UPS DURING THE DAY

Wash Up Attachment

1. Remove bottle and drain the excess water from the pan.
2. Mount a metal plate to the press.
3. Place metering roller in the slot above intermediate roller.
4. Turn on the press and squirt a small amount of press wash on dampener and inker.
5. Drop both the dampener and ink forms to the plate.
6. Use wash up attachment as normal. The plate cylinder is being used as a bridge between the dampener and inker. Solution transfers from the dampener to the plate, plate to inker, and inker to wash up attachment.
7. Wash pan roller by hand.

Cleaner Sheets

1. Remove water bottle and drain the solution from the pan.
2. Mount cleaner sheet to plate cylinder.
3. Place metering roller in the slot above intermediate roller
4. Turn on press and squirt a small amount of press wash on dampener and inker.
5. Drop dampener and inker forms to cleaner sheet.
6. Repeat use of cleaner sheet until dampener and inker are clean. Wash pan roller by hand.

END OF THE DAY

1. Wash up dampener. Pay close attention to cleaning the ends of the pan, metering and intermediate rollers that extend past the form rollers.

2. Spin the knurled knobs up until the metering roller can be removed.

3. Remove metering roller and wipe down thoroughly to remove any excess wash that may be on the roller.

   Even if you are leaving ink on the press overnight, clean the dampener with a cleaner sheet. Place the ink forms in night latch when doing this.

DEGLAZING THE DAMPENER

Periodic deglazing of water-soluble contaminants will be necessary with the Crestline®. Typically, once every 2-3 weeks will be sufficient, unless you are running electrostatic plates on a daily basis whereas deglazing should be performed weekly. A 50/50 solution of household ammonia and hot water can be used for deglazing purposes. If you prefer a commercially available deglazer, avoid those containing pumice or gritty substances. Always follow deglazing with straight water and then roller wash. Accel offers a product called **COMPOUND X** that we recommend for deglazing our system. Contact your dealer or Accel for more information.

OILING AND GREASING THE DAMPENER

A. Place a drop of oil near the bronze bushings once a week.

B. Place a small amount of grease on the gears once a month.

CRESTLINE®
CLEANING & MAINTENANCE CHART

	Daily	Weekly	Bi-Weekly	Monthly
Wash Rollers	✔			
Deglaze Rollers				
Metal Plate Users			✔	
Silvermaster Plate Users			✔	
Electrostatic Plate Users		✔		
Grease Gears				✔
Inspect Ball Bearings				✔
Check Roller Pressures				✔
Check Roller Surfaces				✔

HAMADA 662-OPS

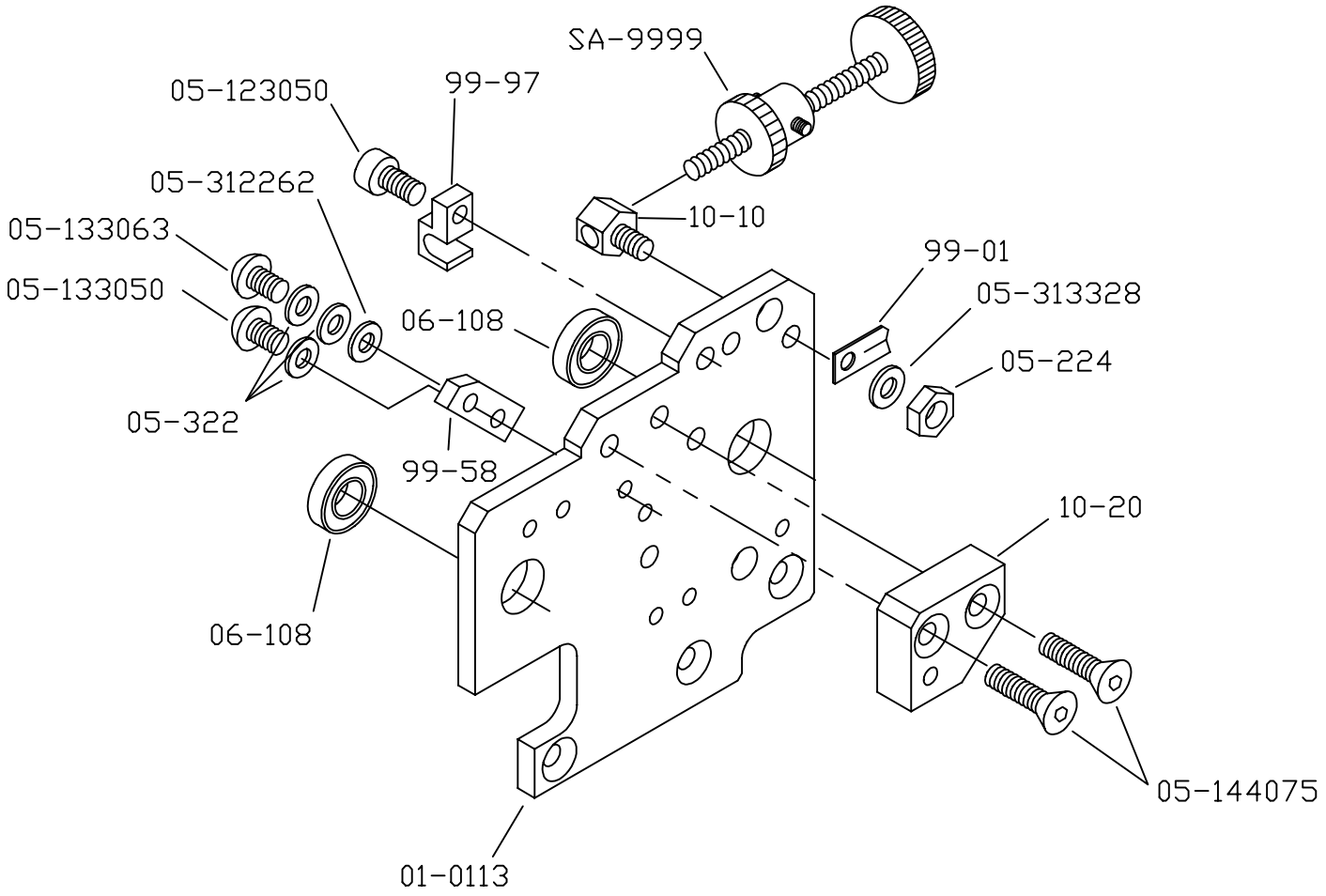

662C01, 4-10-96

HAMADA 662-OPS

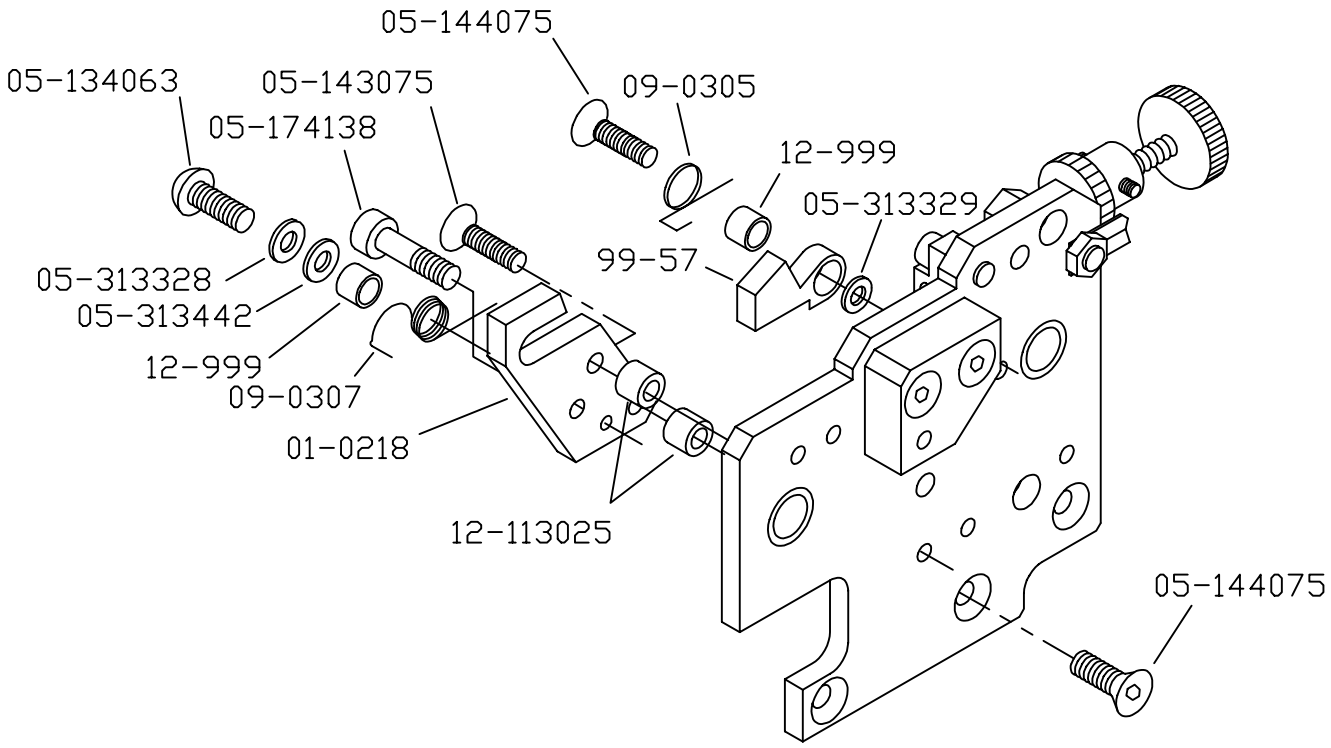

662C02, 4-10-96

HAMADA 662-NOPS

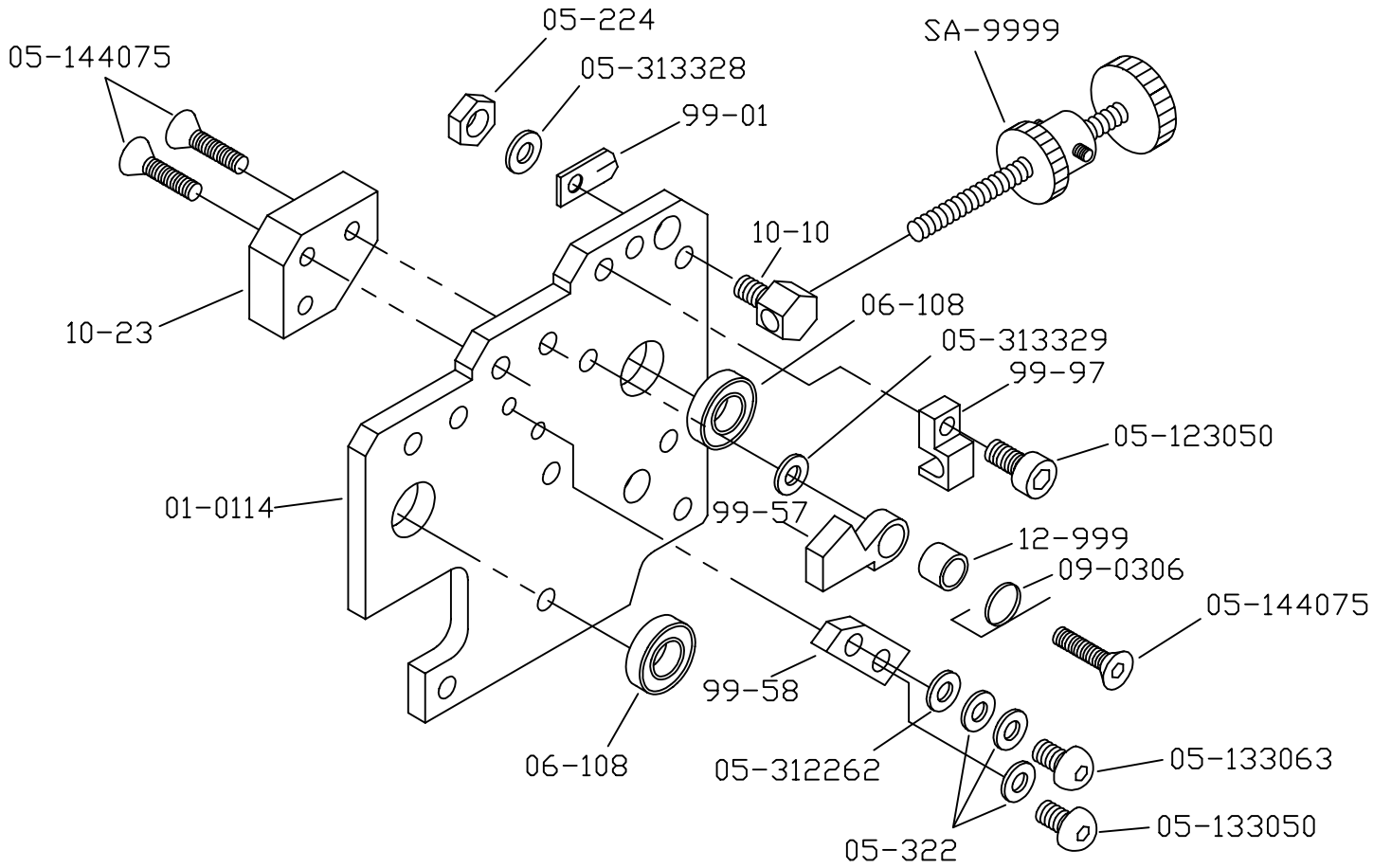

662C03, 4-10-96

HAMADA 662-NOPS

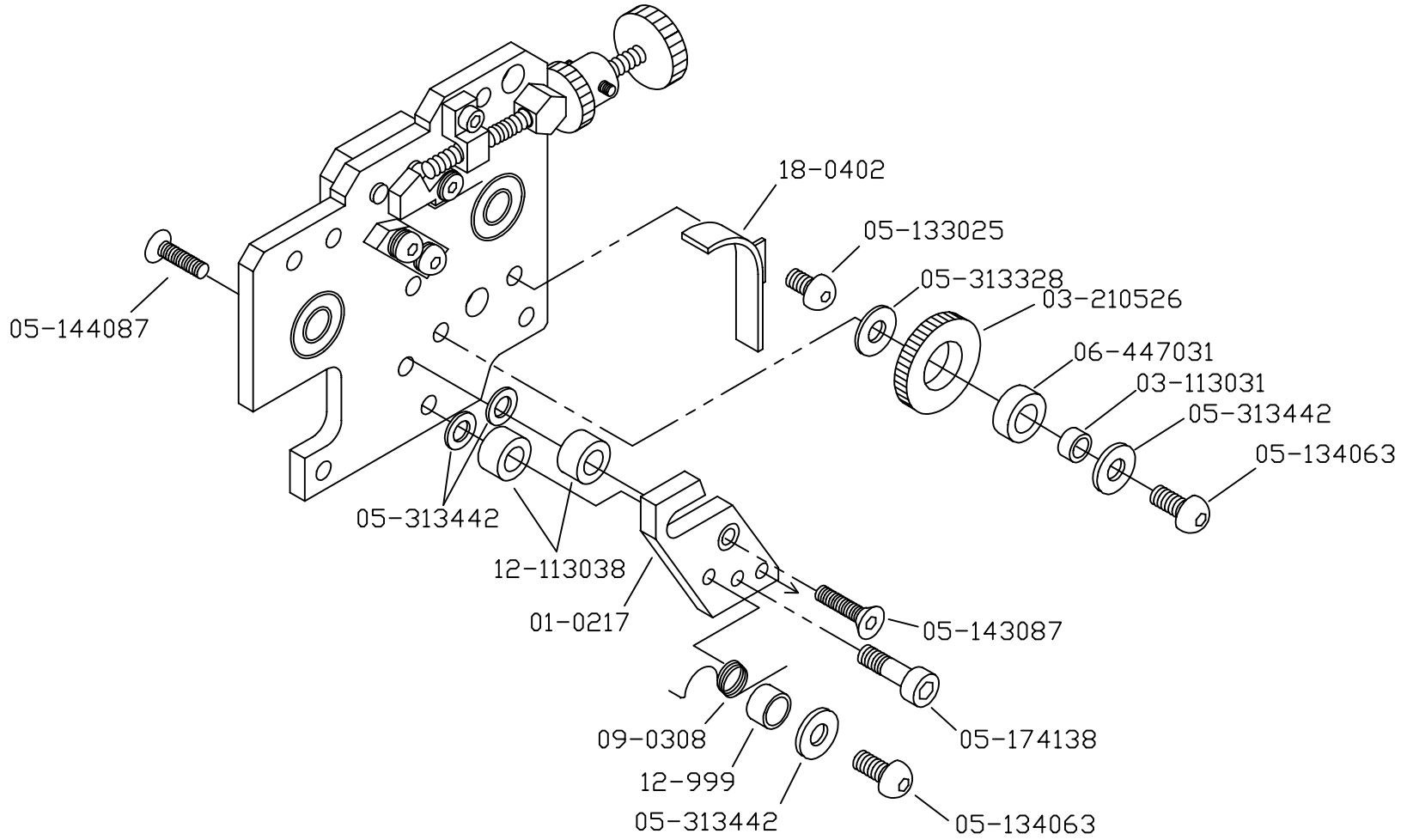

662C04, 4-10-96

HAMADA 662

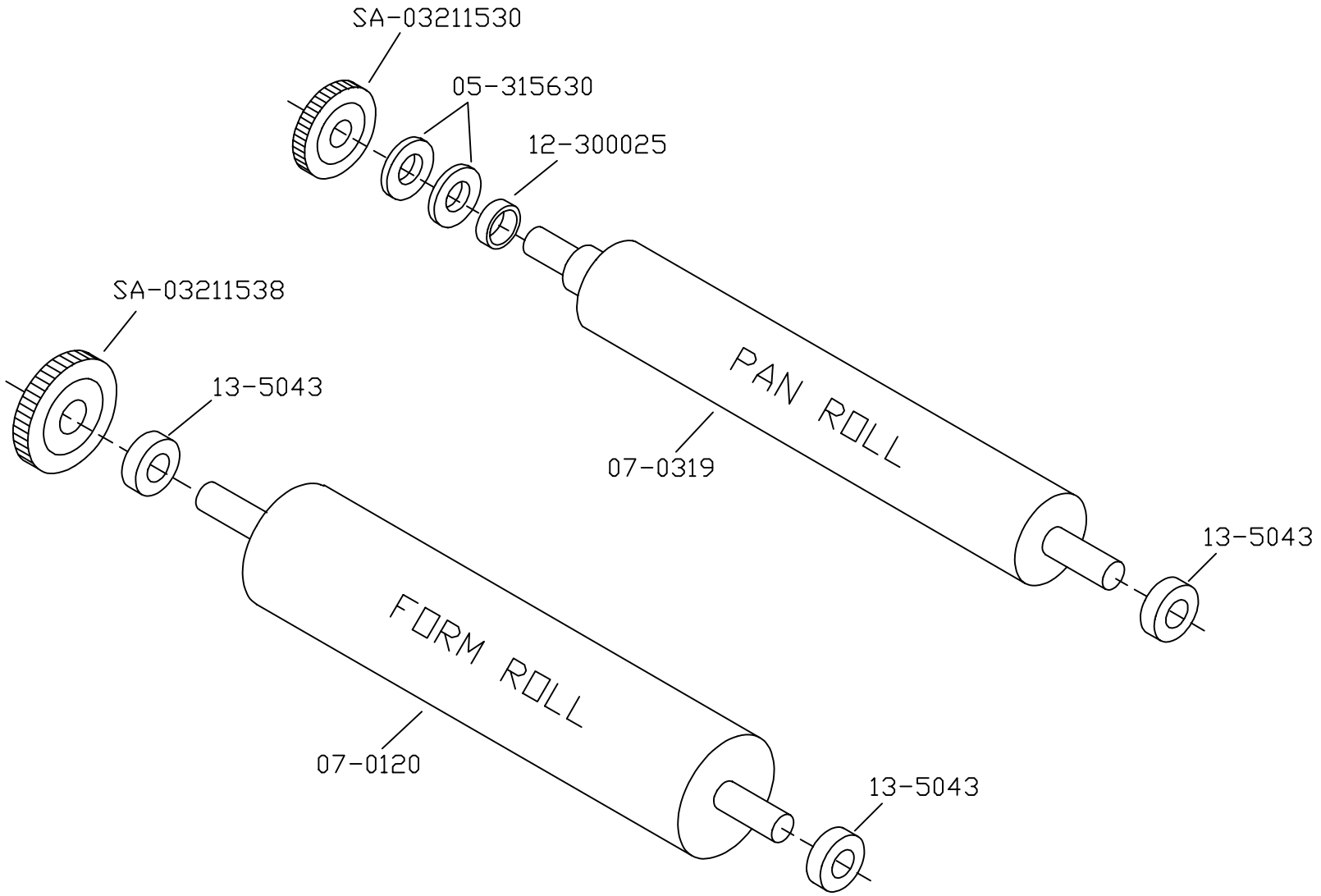

662C05, 4-10-96

HAMADA 662E

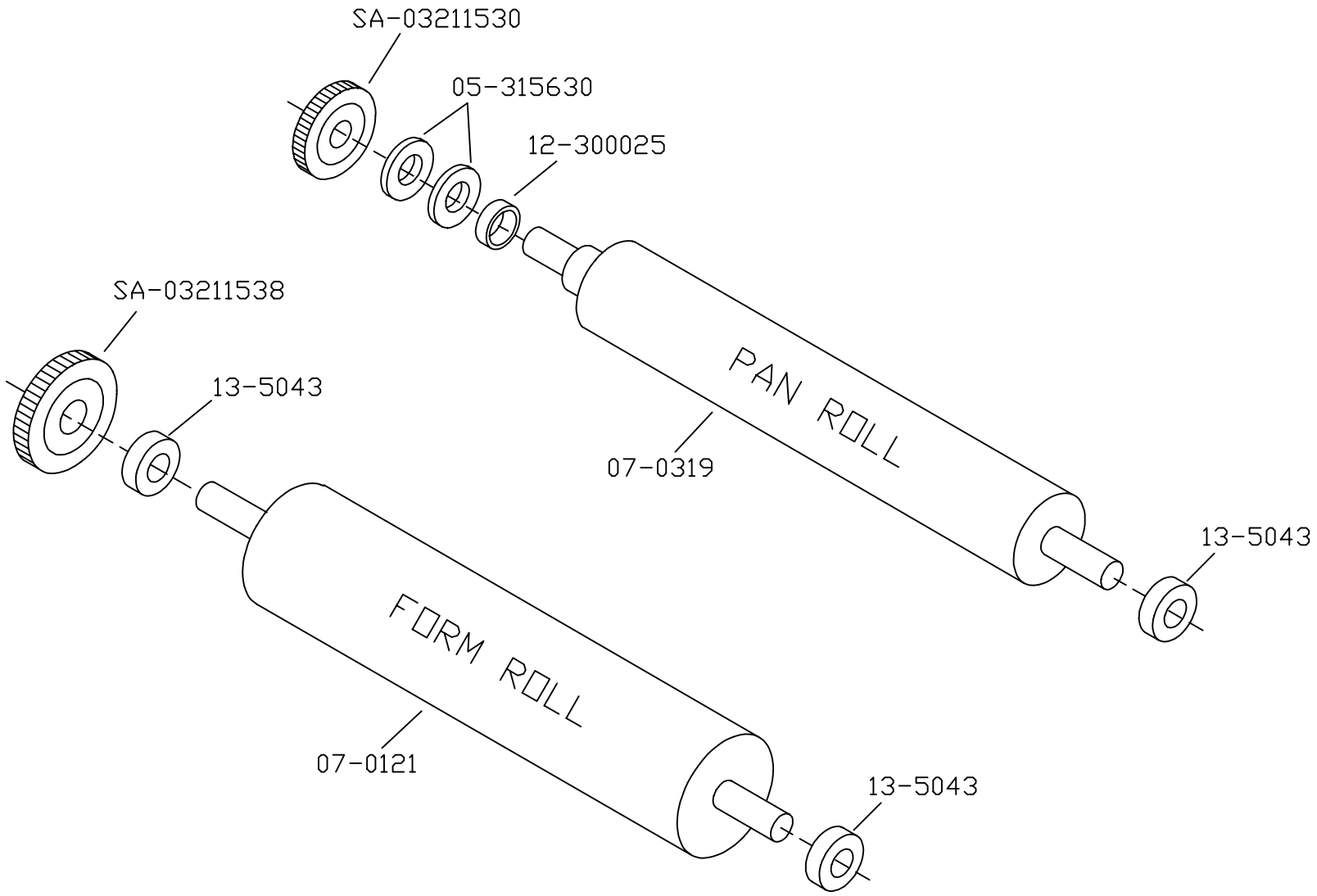

662C17, 4-10-96

HAMADA 662

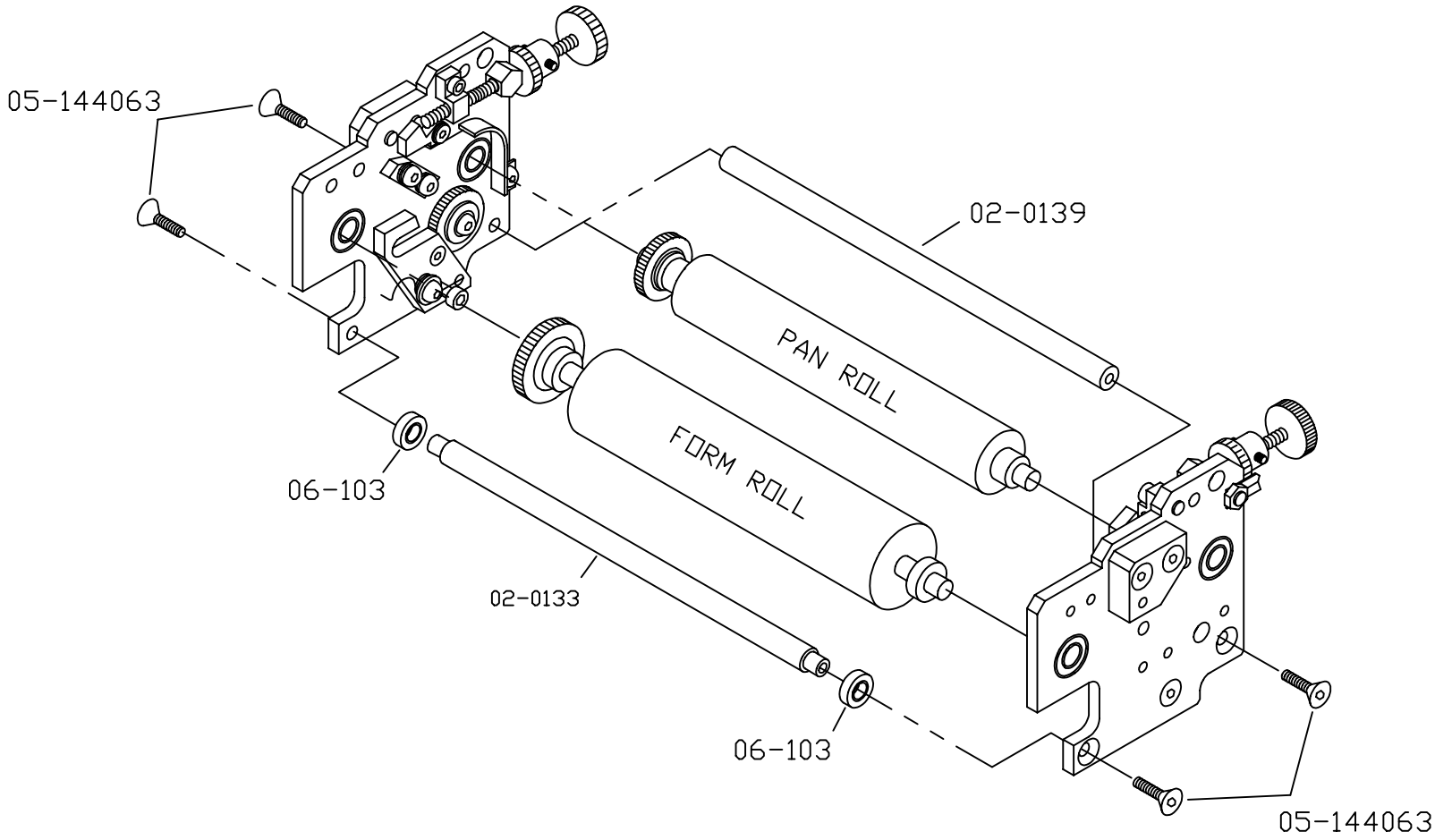

662C19, 4-10-96

HAMADA 662

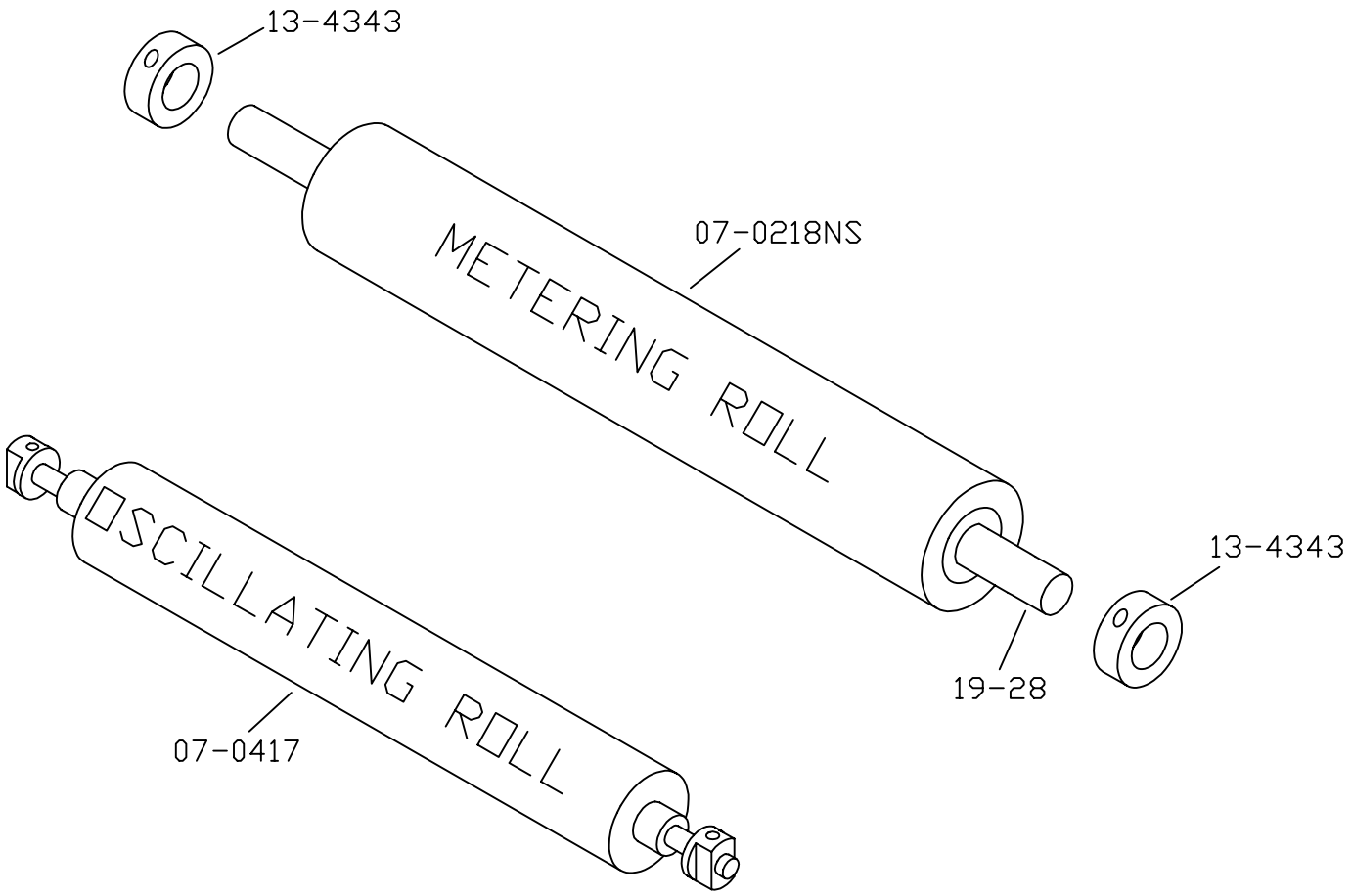

662C06, 4-10-96

HAMADA 662E

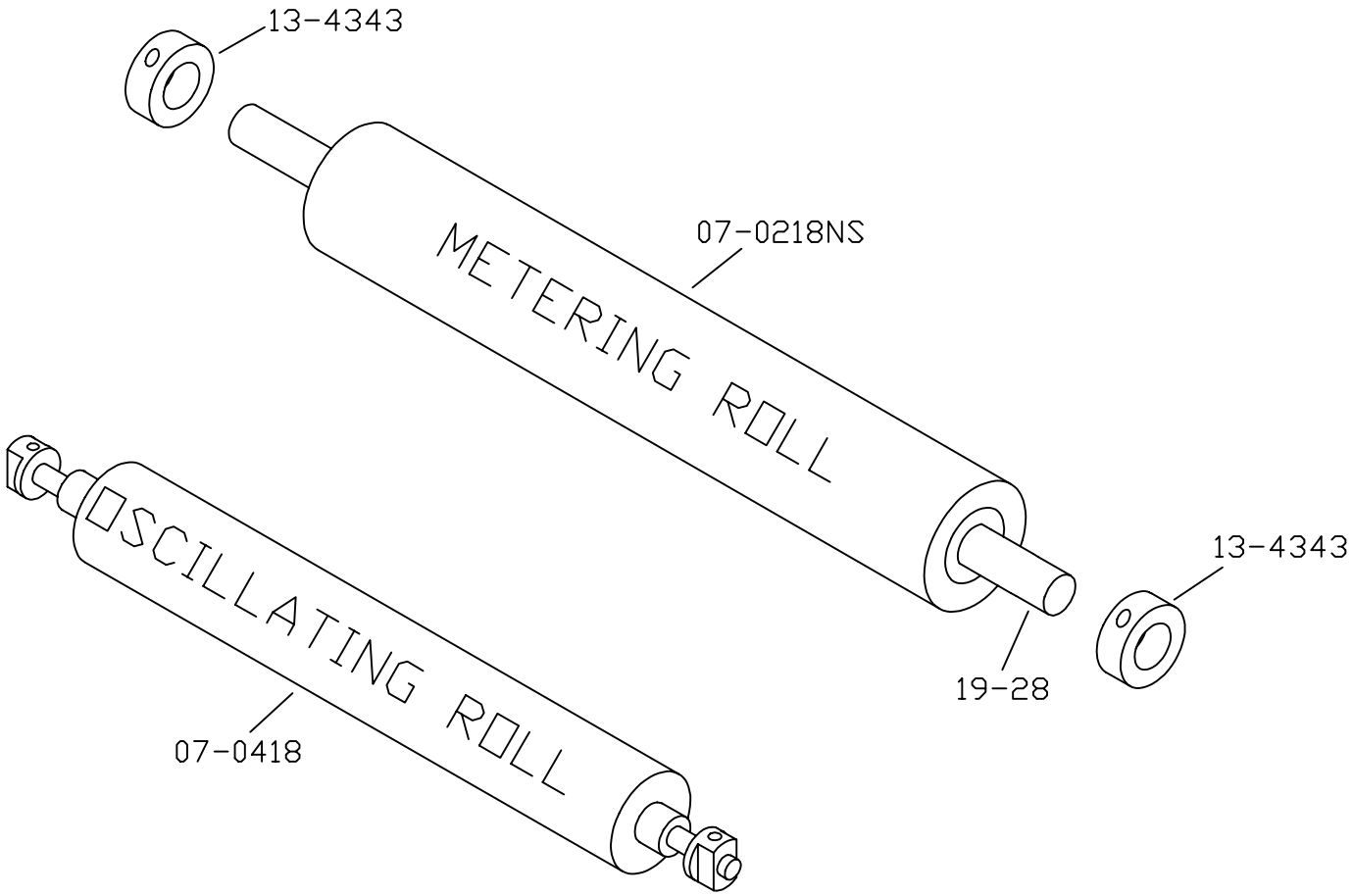

662C18, 4-10-96

HAMADA 662

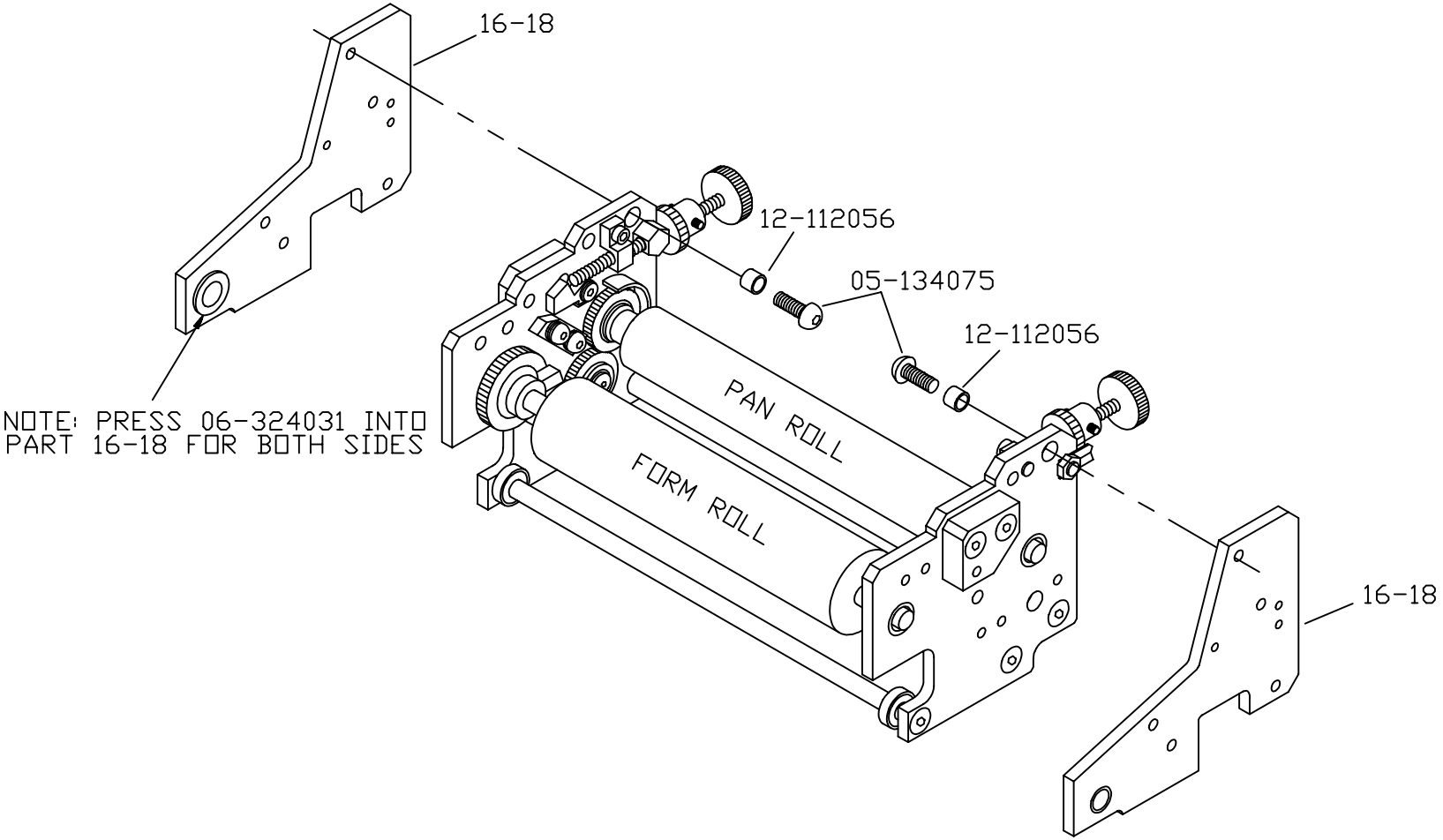

662C07, 4-10-96

HAMADA 662

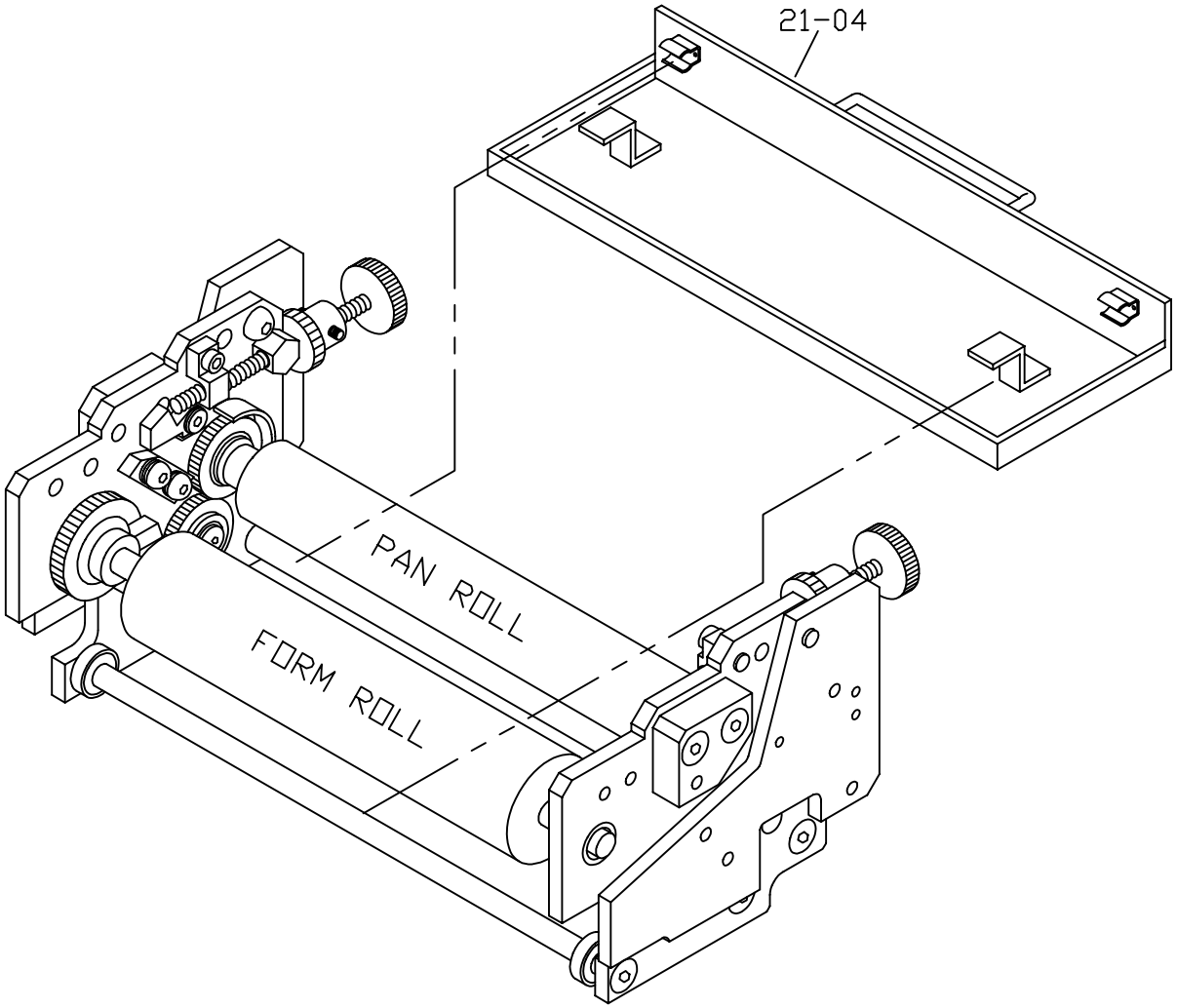

662C08, 4-10-96

HAMADA 662

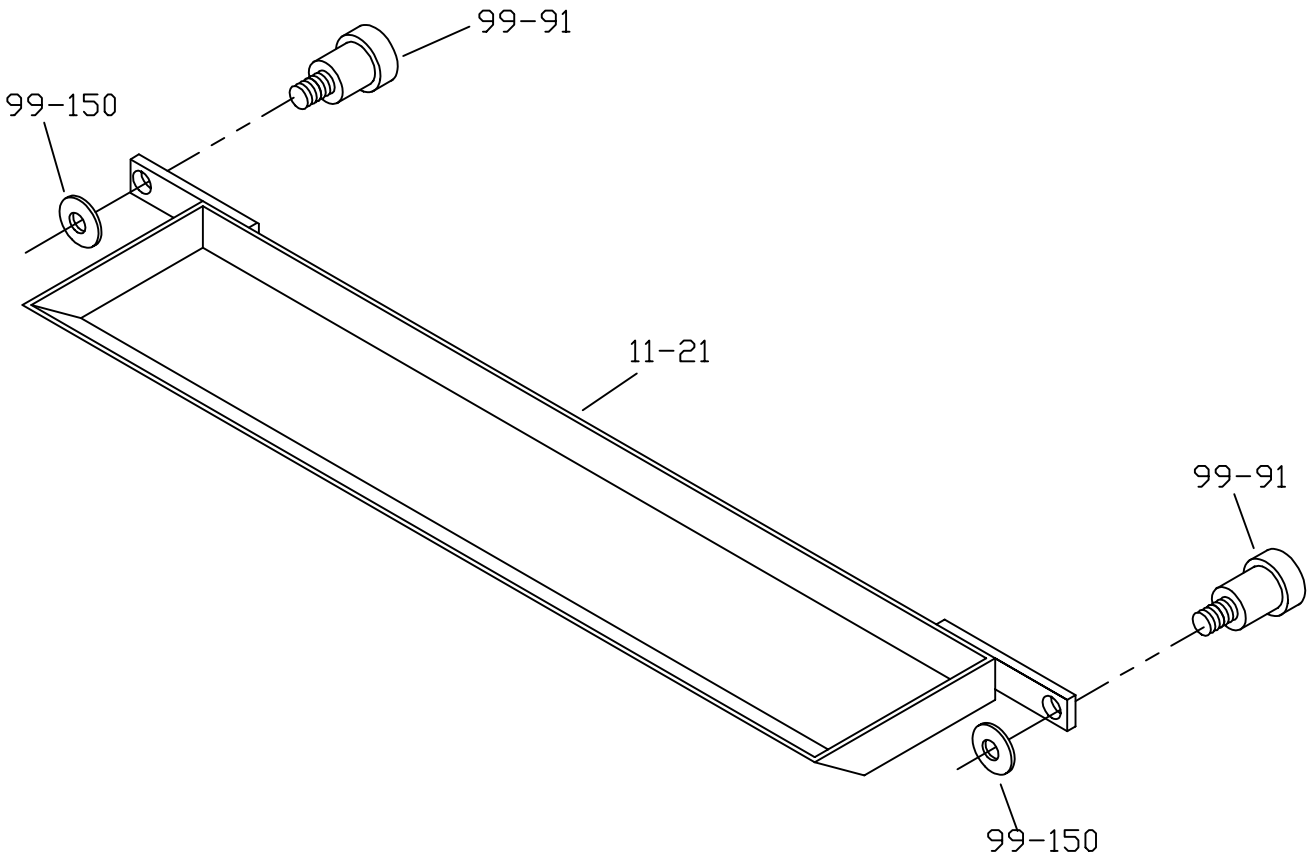

662C09, 4-10-96

HAMADA 662/662E SATELLITE

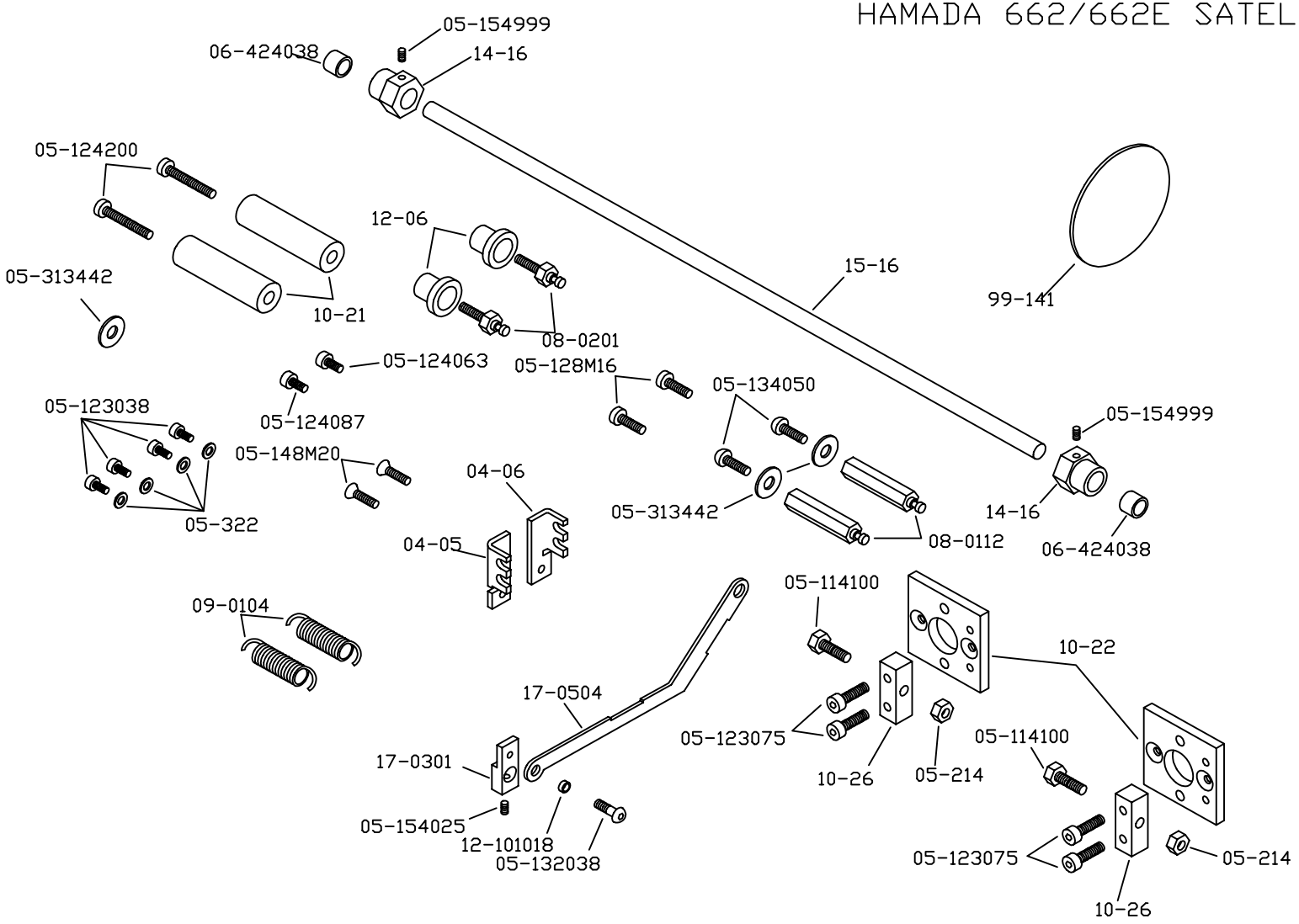

662C14, 4-10-96

ACCEL®

Graphic Systems

11103 Indian Trail, Dallas, TX 75229 Phone 972-484-6808, Fax 800-365-6510
E-mail accel@dallas.net, Web Site www.accelgraphicsystems.com